July 5th, 2017

Village of Cazenovia, New York

Investment Grade Audit

Greg Royer
Account Executive
3 Rosell Dr, Ballston Lake, NY
518-406-0327
groyer@smartwatt.com

Ryan Urschel, CEM, CMVP
Energy Engineer
3 Rosell Dr, Ballston Lake, NY
518-406-0326
rurschel@smartwatt.com

smartwatt

Table of Contents

Figures

Tables

Appendices

Appendix G – Street Lighting Design Documents

1.0 Executive Summary

1.1 Project Overview

SmartWatt is pleased to provide this Investment Grade Audit (IGA) for the Village of Cazenovia, NY. We developed the following report to identify, document, and present infrastructure improvements and cost reduction strategies for the Village.

We greatly value the support we have received from the Village staff during the IGA and look forward to expanding our partnership with the Village by implementing the Facility Improvement Measures (FIMs) described in the report through an Energy Savings Performance Contract (ESPC).

This report provides the scope of work, energy savings estimates, and cost proposal for street lighting upgrades and building improvements located throughout the Village and at the following facilities:

- Street Lighting (Various Locations)
- Village Hall
- Village Fire Station
- Department of Public Works

SmartWatt will complete the scope of work described in this proposal for an installed cost of $417,684. The Village of Cazenovia was quoted $312,138 from National Grid to purchase the street lighting under utility account ending in #105 (SC-2 Company Owned Company Maintained). SmartWatt has estimated a utility incentive of $2,402, therefore the overall project cost to the Village including the buyback and utility incentive is $727,420.

1.2 Summary of Proposed Facility Improvement Measures (FIMs)

SmartWatt previously conducted a Preliminary Feasibility Assessment (PFA) to document the potential energy savings and budgetary costs. The Facility Improvement Measures (FIMs) identified in the PFA were evaluated in detail and the FIMs shown in ***Table 1*** were selected by the Village for implementation.

The FIMs identified in this report will result in a total annual energy cost savings of $17,453/year, which translates to a 50% reduction in annual utility energy costs. The majority of these cost savings are allocated to Street Lighting. In addition, annual maintenance savings of $60,524 are associated with the street lighting tariff rate class change from SC-2 to SC-3 and additional end of life mechanical maintenance savings. This will eliminate the billed “maintenance fees” associated with the fixtures/poles/foundations and underground wiring. Our project maximizes the financial benefit of the ESPC by combining longer payback capital improvement items with shorter payback measures.

Table 1 provides savings, implementation price, and National Grid “Buyback” cost for the recommended FIMs. The FIM recommendations presented will provide the Village the ability to accomplish the following:

- Reduce annual electricity consumption by 56%
- Decrease annual natural gas consumption by 8%.

Table 1: Summary of Recommended Facility Improvement Measures

FIM Name	Annual Utility Savings ($/yr)	Annual Maintenance Savings ($/yr)	Street Lighting "Buyback [1]" Cost / Incentive	FIM Implementation Cost	Total Project Costs Including Utility "Buyback" & Incentive
1: Street Lighting Upgrades	$14,304	$53,169	$312,138	$223,268	$535,407
2: Interior LED Lighting Upgrades	$1,537	$183	$1,202	$26,590	$25,388
3: Building Envelope Improvements	$361	-	-	$23,188	$23,188
4: RTU Replacements	$548	$3,271	-	$65,412	$65,412
5: DX Cooling System Upgrades	$469	$1,993	-	$39,858	$39,858
6: Boiler Improvements	$234	$1,908	$1,200	$39,367	$38,167
TOTAL	**$17,453**	**$60,524**	**-**	**$417,684**	**$727,420**

1.3 Project Guidelines and Goals

SmartWatt has worked with the following objectives in mind for the Village Facilities:

- Reduce energy and maintenance costs for the Village's facilities.
- Maintain or improve existing environment within each facility.
- Improve the quality of the street lighting.
- Adherence to guidelines for performance contracting in New York State Public Municipalities.

Additional benefits to the Village will include:

- No requirement for a referendum and voter approval for an Energy Performance Contract.
- This project will not affect the Village's debt limit, or ability to bond future capital projects if a performance contract is used for procurement.
- Procurement not subject to low bid process for goods and services – provides best value in lieu of lowest cost.
- Guarantees quality engineering, construction and long-term performance under a turnkey approach.

[1] This is a direct quote from National Grid dated 3/16/2017 to purchase the utility owned street lighting for the account number ending in 105.

1.4 Environmental Benefits

In addition to reducing energy consumption, these turnkey improvements give the Village the opportunity to reduce its carbon footprint, reducing harmful environmental impacts. The positive impact this project will have on the environment is quantifiable. Most of the energy generated by power plants in the United States comes from burning fossil fuels. By reducing your energy consumption, fewer fossil fuels are consumed which means less pollution. For the Cazenovia area, the project will reduce greenhouse gases by about:

- 95 metric tons CO_{2e} each year

Figure 1 illustrates the reduction in greenhouse gases each year in terms of equivalencies of familiar items.

Figure 1: Greenhouse Reduction Equivalencies

20 Vehicles Off the Road

90 Acres of Trees

Energy for 11 Homes

2.0 Facility Description

SmartWatt Engineers audited multiple locations in the Village as summarized in ***Table 2***. The total square footage of the sites audited is about 22,303 ft^2.

Table 2: Summary of Audited Facilities

Facility	Address	Square Footage
Street Lighting	Village-Wide	-
Village Hall	90 Albany Street	12,737
Fire Station	127 Albany Street	3,912
DPW Garage	27 William Street	5,654

Street Lighting

National Grid has provided SmartWatt with an updated inventory of the street lighting that the Village is currently being billed for under rate structure SC-2 of the Street Lighting Tariff. SmartWatt Energy Engineers field verified 281 total street lights under the street lighting account ending in 105.

The majority of the lighting is cobra head style fixtures (187). The remaining (94) fixtures are different variations of decorative style fixtures. All lamps verified are HPS (High Pressure Sodium). The picture to the right shows a typical 100W HPS decorative fixture on Albany Street. During the on-site audit, SmartWatt has performed a photometric analysis of the current light levels on each of the fixture types throughout the Village. This was to verify that the correct fixture was selected for the desired light levels. The results of the photometric analysis are included in ***Appendix G.***

The Village is paying approximately $74,488 in annual utility costs for street lighting. The most up to date 2017 utility rates and maintenance fees from the National Grid Street Lighting Tariff were used for the purpose of this IGA.

Village Hall

The Village Hall is located at 90 Albany Street. It was a former Fire Station and was most recently renovated in 1991. It is two floors with a partially occupied basement. The building is typically occupied 8am-5pm Monday through Friday with some events taking place upstairs in the auditorium several evenings a month. The majority of the building is office space with the village police station located on the first floor.

There are two (2) gas-fired rooftop units; one unit serves the first floor auditorium while the other unit serves part of the basement and the remainder of the first floor. There are two Utica boilers located in the basement that serve fin tube radiation and fan coil units located throughout the building. Each RTU is operated by a stand-alone thermostat. The fin tube radiation for the whole building is controlled by one thermostat located in the Village Clerks office. Each individual baseboard has a thermostatic radiator valve (TRV) to provide limited manual control for the heat in that corresponding area.

The annual utility spend for this building is approximately $6,561.

Fire Station

The Fire Station is located at 127 Albany Street. It was built in 1989 and operates when there is a fire call. The majority of the building is garage space with a few offices, a fitness room and a kitchen area.

The garage is heated with gas fired overhead infrared heaters. There is a boiler located on the second floor with three zones feeding fin tube radiation located throughout all areas except the garage. Each of these zones is equipped with a stand-alone thermostat. There is a 2 ton direct expansion cooling unit located on the west side of the facility that serves the main hallway and dispatcher area. There is another 7 ton direct expansion unit that serves the fitness and kitchen areas on the back side of the building.

The annual utility spend for this building is approximately $5,749.

DPW Garage

The DPW Garage is located on 27 William Street. It is a 5 bay garage with some storage and office areas. The hours of operation usually are from 7am- 3pm Monday through Friday. The winter months tend to see longer use due to snow removal vehicles being serviced and stored.

The Garage is heated with 6 gas-fired unit heaters located toward the back of the Garage. Each one of these unit heaters is controlled with an individual thermostat.

The annual utility spend for this building is approximately $4,960.

3.0 Utility Usage Overview

3.1 Utility Usage and Cost Summary

The Village currently spends **$91,760** annually on utilities (including street lighting facility charges) for the following buildings included in the recommended Scope of Work:

- Street Lighting
- Village Hall
- Fire Station
- DPW Garage

Table 3 and ***Figure 2*** summarize the energy cost allocated to electricity and natural gas consumption for the facilities included in the IGA for the baseline period. ***Figure 2*** indicates that street lighting facility charges accounts for two thirds of the Village's utility costs.

Table 3: Annual Utility Usage & Cost Summary

Electricity		Street Lighting "Facility Charges"	Natural Gas	
kWh/yr	$/yr	$/yr	Therm/yr	$/yr
234,583	$28,198	$57,117	10,958	$6,445

Figure 2: Annual Utility Costs

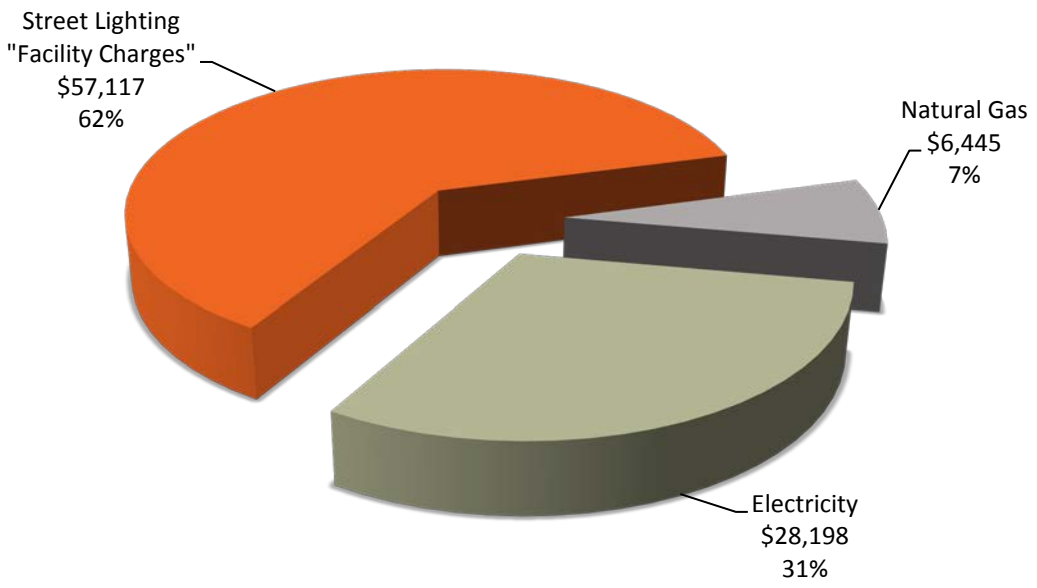

3.2 Utility Rate Review

Utilities and energy sources for the buildings reviewed in the Village are electricity and natural gas. National Grid is responsible for supply and distribution for both energy sources.

To determine the cost savings potential for a reduction in energy usage and street lighting maintenance the incremental cost of the utility was determined. Electricity and natural gas are based on the average for billing during the 2016 calendar year. Electricity and natural gas supply costs are based on the current contract with the supplying contractor, which in this case is National Grid. The delivery rates include the most recent miscellaneous charges from the baseline period (SBC, legacy, Muni Underground). The rates used to calculate savings are summarized in Table 4.

The facility charges that the Village is currently paying for the street lighting measure of the IGA are taken from the most recent street lighting tariff for the SC-2 rate structure (PSC No. 214). The rates used to calculate baseline maintenance costs are summarized in ***Table 5.*** These rates are included in the Street Lighting Tariff filed with the New York State Public Service Commission. The Street Lighting Tariff is located in **Appendix E** of this IGA.

Table 4: Utility Rates Summary

Facility	Electricity Distribution ($/kWh)	Electricity Supply ($/kWh)	Electricity Total ($/kWh)	NG Distribution ($/Therm)	NG Supply ($/Therm)	NG Total ($/Therm)
Street Lighting	$0.0988	$0.0228	$0.1216	-	-	-
Village Hall	$0.0590	$0.0427	$0.1017	$0.2746	$0.3190	$0.5936
Fire Station	$0.1025	$0.0407	$0.1432	$0.3886	$0.2703	$0.6589
DPW	$0.1005	$0.0400	$0.1405	$0.2777	$0.3328	$0.6104

When the Village purchases and owns the street lighting the lighting will be placed in the SC-3 rate structure. When this is complete, the base rate for delivery in the SC-3 rate structure is $0.05906. SmartWatt has included the most recent miscellaneous charges from the baseline period into this charge. The table below represents the total delivery charge for proposed street lighting used for calculations in this project.

Facility	Proposed Electricity Distribution ($/kWh)
Street Lighting	$0.0700

Table 5: Baseline Street Lighting Facility Charges

Fixture Type	Billed Lamp Wattage	Quantity	Monthly Lamp Charge ($/item)	Monthly Luminaire Charge ($/item)	Total Monthly Cost $
70W HPS Cobra Head	86	134	$0.6658	$4.471	$688.76
100W HPS Cobra Head	118	35	$0.6658	$4.471	$179.78
250W HPS Cobra Head	304	18	$0.6808	$5.251	$106.77
100W HPS Central Park Post Top	118	7	$0.6658	$10.538	$78.43
100W HPS Aspen Grove Post Top	118	13	$0.6658	$8.641	$121.00
100W HPS Traditional Post Top	118	37	$0.6658	$4.154	$178.33
150W HPS Williamsville Post Top	173	37	$0.6658	$9.924	$392.82
Total		**281**			**$1,744.89**

Item Type	Quantity	Monthly Item Charge ($/item)	Total Monthly Cost $
Metal Pole Outlet	39	$3.9759	$155.00
Residential Direct Burial Cable	27	$7.3317	$197.96
Direct Burial Cable and Conduit	69	$9.8550	$680.00
Foundations	23	$17.953	$412.92
Fiberglass Presidential Pole	7	$13.041	$91.29
Fiberglass Standard Pole - DE	27	$7.690	$207.63
Fiberglass Standard Pole - AB	19	$5.595	$106.31
Aluminum Armory Square Pole	39	$27.95	$1,090.25
Aluminum Standard Pole – AB	1	$21.06	$21.06
Aluminum Villager Pole	1	$9.3167	$9.32
Steel Pole – Standard	2	$21.695	$43.39
Total	**254**		**$3,015.17**

3.3 Baseline Annual Energy Usage

This section summarizes the baseline period energy usage for the facilities audited. ***Table 6*** presents a summary of the average utility consumption for each facility by energy source for the baseline year. A summary of the baseline period usage and cost data are provided in ***Appendix A***.

Table 6: Baseline Utility Usage Summary

Facility	Electric Usage (kWh/yr)	Natural Gas Usage (therm/yr)
Street Lighting	142,835	-
Village Hall	42,789	4,051
Fire Station	27,000	3,391
DPW Garage	21,959	3,516
Total	**234,583**	**10,958**

Figures 3 and ***4*** indicate the electricity and natural gas use percentages for each building. The pie charts show that the street lighting consumes 61% of the electricity for the Village, while the natural gas usage is evenly distributed among each building.

Figure 3: Electricity Usage by Facility

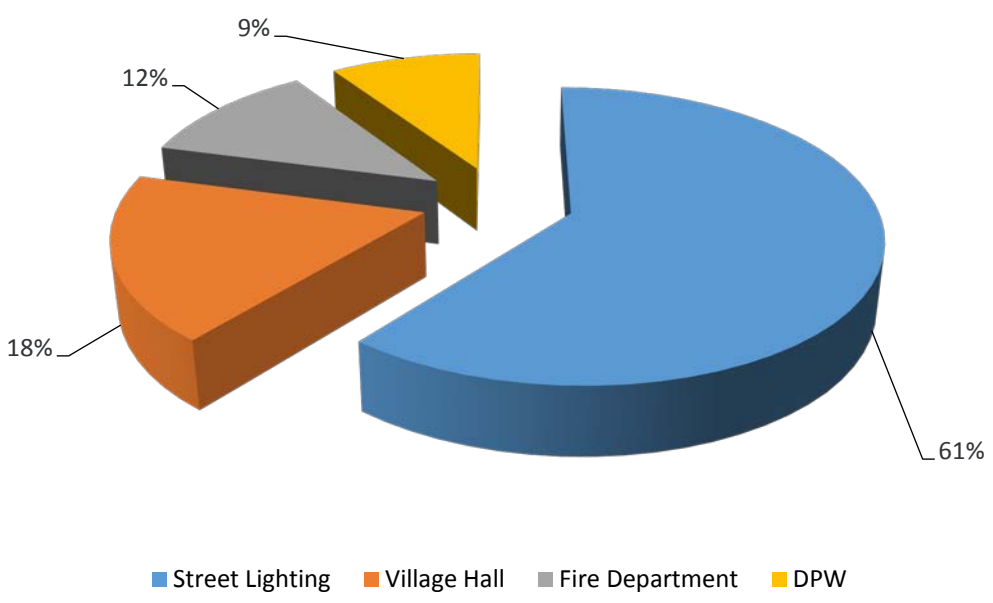

Figure 4: Natural Gas Usage by Building

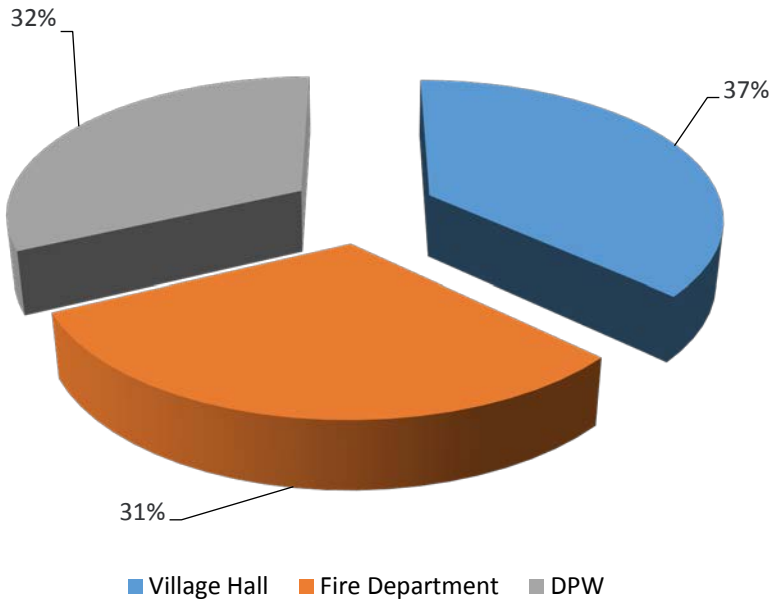

Figures 5 and **6** display the monthly utility usage for electricity and natural gas during the baseline period. Annual usage and cost data for energy is provided in ***Appendix A*** in tabular form.

Figure 5: Baseline Electrical Usage

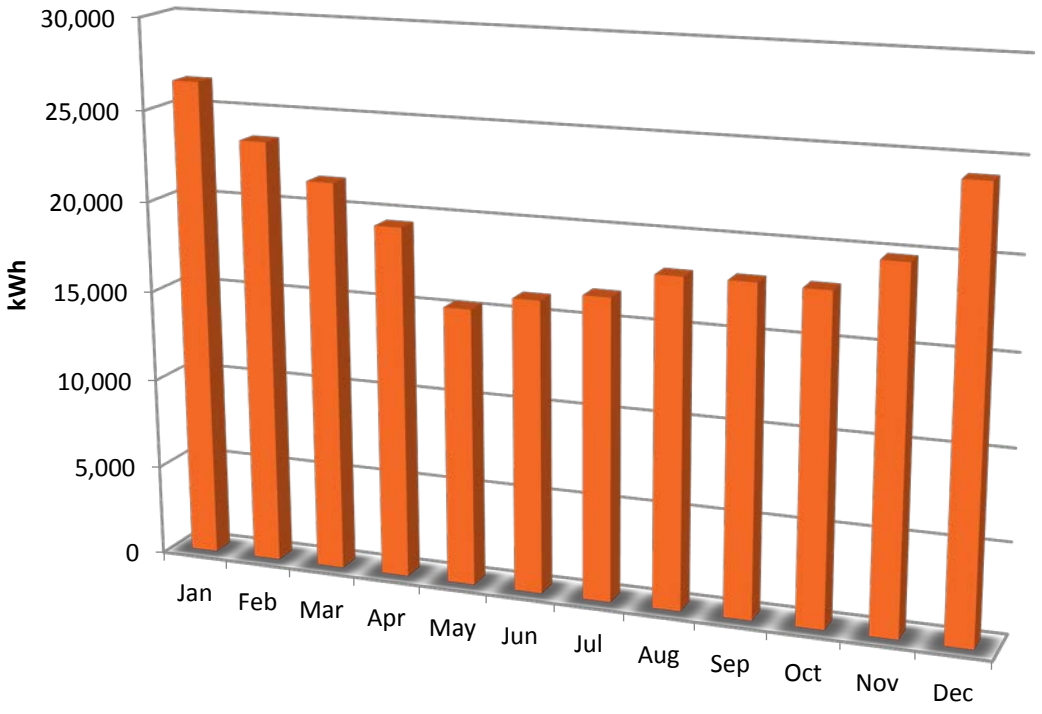

Figure 6: Baseline Natural Gas Usage

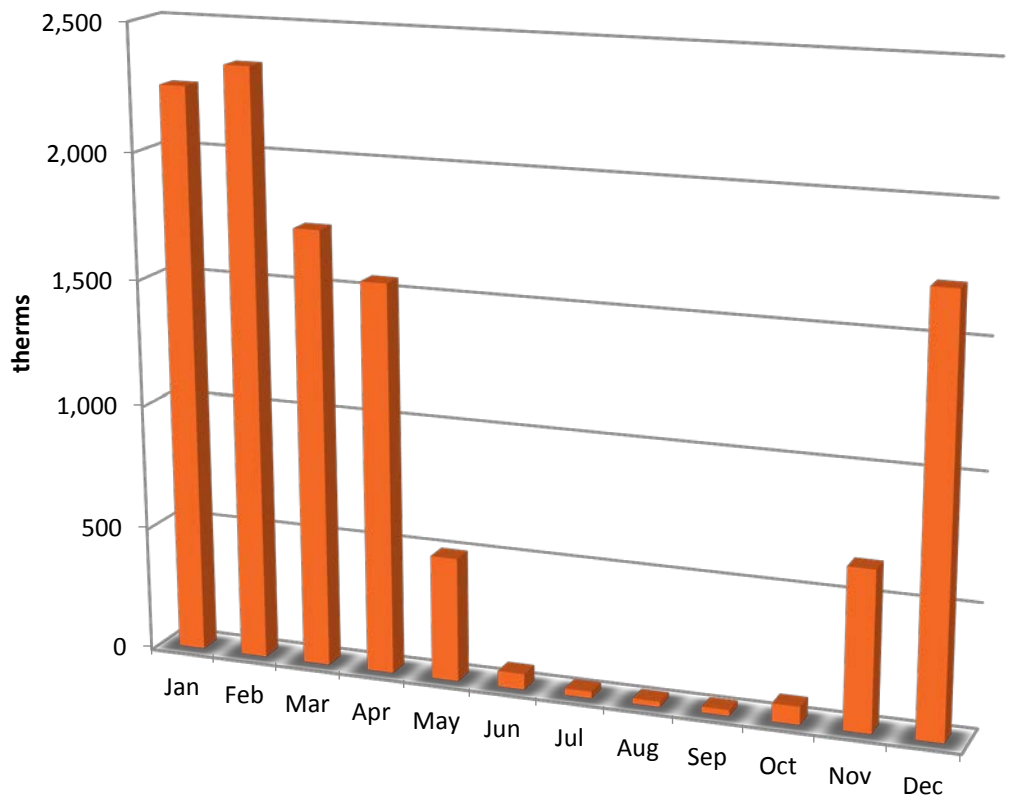

3.4 Reconciliation of Usage to Baseline

SmartWatt has used 2016 utility data for the Village Hall, Fire Station, and DPW. The street lighting baseline utilities were derived from the results of our on-site audit of the current fixtures being billed to the Village from National Grid and the current charges in the street lighting tariff filed with the PSC.

3.5 Utility Benchmarking – Energy Utilization Index

The Energy Utilization Index (EUI) provides a summary of a building's energy intensity. Tracking your EUI over time provides insight into the energy usage behavior of your facility. ***Table 8*** summarizes the annual average energy (electricity and natural gas) usage, cost, and energy intensity for the baseline period.

Table 7: Average Energy Intensity Summary

Facility	Square Footage	Annual Energy Usage (kBtu/yr)	EUI (kBtu/ft²)
Village Hall	12,737	551,139	43
Fire Station	3,912	431,251	110
DPW Building	5,654	426,546	75
Total	**22,303**	**1,408,936**	**63**

4.0 Facility Improvement Measures (FIMs)

4.1 FIM #1: Street Lighting Upgrades

Total Energy Cost Savings	Total Maintenance Cost Savings	Utility "Buyback" Cost	Total FIM Cost (Including Buyback)
$14,304	$53,169	$312,138	$535,406

Observation

SmartWatt performed a detailed street lighting audit of the utility owned fixtures that are affixed to poles for the account paid by the Village. There are a total of 281 verified fixtures allocated to utility account ending in #105. A summary of the verified active street lighting fixtures are provided in the table below. A detailed line-by-line audit, which details the existing fixtures and proposed LED fixture, is provided in ***Appendix D***.

Table 8: Existing Street Lighting Fixture Summary

Luminaire Type	Billable Fixture Wattage	Number of Fixtures
70W HPS Cobra head	86	134
100W HPS Cobra head	118	35
250W HPS Cobra head	304	18
100W Central Park Post Top	118	7
100W Aspen Grove Post Top	118	13
100W Traditional Post Top	118	37
150W Williamsville Post Top	173	37
Total		**281**

National Grid bills the Village for the energy consumption and maintenance of the lighting through Rate Schedule SC2 – Street Lighting – Unmetered, Company Owned/Company Maintained. Under this agreement National Grid owns and maintains the street lighting and imposes a facility charge for maintaining the lighting system infrastructure which is comprised of the following components in this project:

- Lamp
- Luminaire
- Pole
- Cable and Conduit
- Foundation
- Convenience Outlet

The table that follows describes the current annual costs for the electricity and facility charges at the Village.

Table 9: Current Annual Street Lighting Cost Summary

Fee Type	Units	Annual Cost ($/yr)	Unit Cost
Energy Usage (kWh)	142,835	$17,372	$0.122
Lamp Maintenance	281	$2,248	$8.00
Luminaire Maintenance	281	$18,685	$66.49
Convenience Outlet Maintenance	39	$1,861	$47.72
Residential Direct Burial Cable	27	$2,376	$89
Direct Burial Cable and Conduit	69	$8,160	$118
Foundations	23	$4,955	$215
Fiberglass Presidential Pole	7	$1,095	$157
Fiberglass Standard Pole - DE	27	$2,492	$92
Fiberglass Standard Pole - AB	19	$1,276	$67
Aluminum Armory Square Pole	39	$13,083	$335
Aluminum Standard Pole – AB	1	$253	$253
Aluminum Villager Pole	1	$112	$112
Steel Pole – Standard	2	$521	$260
Total		**$74,489**	

Recommendation

In an effort to reduce electricity consumption and maintenance costs, SmartWatt proposes replacing all 187 cobra head fixtures with new LED fixtures. The remaining 94 post top fixtures will be retrofitted with new LED lamps and drivers. The existing post top fixture housing will remain. This will take place after the Village purchases the fixtures from National Grid. The operating life of the LEDs are typically rated between 100,000-150,000 hours which is significantly longer than the Village's existing lighting. New LED fixtures will exhibit the following characteristics:

- Lasts 100,000 - 150,000 hours (22- 34 years).
- 10 year warranty.
- Highest efficiency compared to other technologies.
- Exceptional reliability when compared to other lighting technologies.
- Lowest maintenance cost of any lighting technology.
- Lowest total cost of ownership/lifecycle cost.
- Ranges in color temperature from 2200K to 5000K.

SmartWatt will replace the existing cobra head light fixtures with new LED light fixtures and photocells. Existing pole-arms and masts will be re-used wherever possible. The existing removed fixtures, lamps and ballasts, as well as any metal and cardboard will be recycled. The existing post top fixtures will be retrofit with new LED lamps and drivers.

As part of the buyback process, a National Grid approved in-line disconnecting device equipped with over-current protection will be installed at each cobra head fixtures. ***Appendix F*** includes a graphical

representation of each disconnect installation scenario approved by the utility. In the case where there is a post top fixture, an in-ground hand hole will be installed adjacent to the nearest pad mounted transformer with a utility approved disconnect device as shown in ***Figure 7***. The exception to this scenario for post top fixtures would where the fixture is located on a concrete side walk as is the case on Albany Street. In this situation a utility approved disconnecting device will be installed in the hand hole located at the base of the fixture.

Figure 7: In-Ground Disconnect to Pad Mounted Transformer

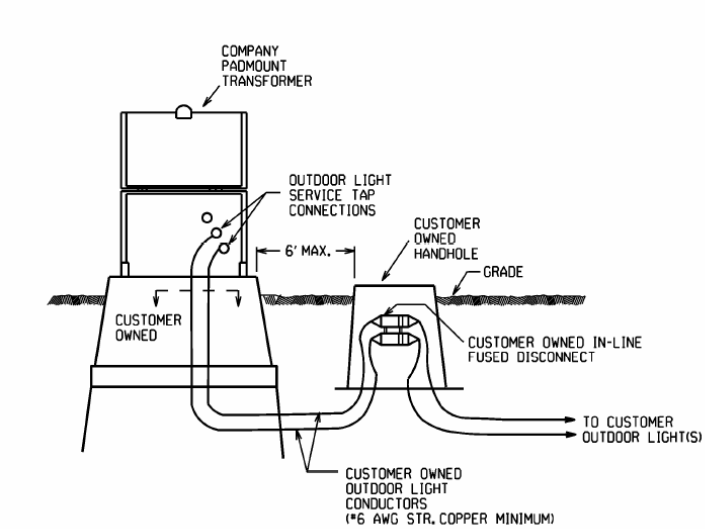

In the case where there is a post-top fixture supplied from an overhead secondary conductor an in-ground hand hole will be installed adjacent to the riser that is supplying the post top fixtures as shown in ***Figure 8***. This is the case with the fixtures located near the college.

Figure 8: In-Ground Disconnect to Overhead Riser

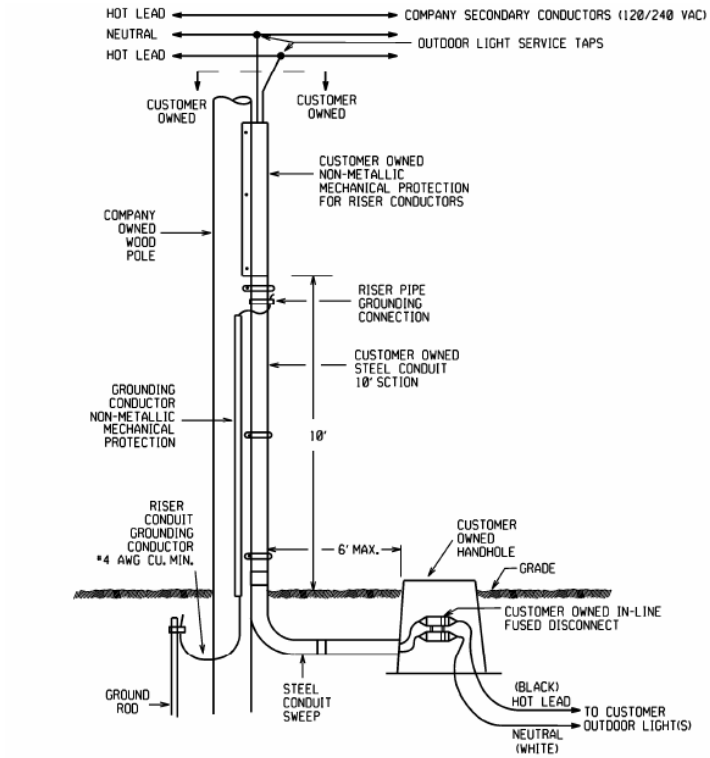

SmartWatt will be responsible for disposal and recycling of existing lighting fixtures. SmartWatt will provide all necessary aerial equipment for safe and proper replacement of the light fixtures in accordance with good practice and local codes and ordinances. SmartWatt will provide necessary traffic control/diversion measures as mandated by local codes and ordinances. This includes all necessary cones, flaggers, barriers, barricades, and vehicles.

In some cases existing wiring may be damaged and deemed unsuitable for re-use. SmartWatt will replace damaged wiring as part of the LED upgrade for up to 25% of the fixture inventory.

Table 10 provides a summary of the lighting upgrades by fixture type. Detailed line-by-line summary of the lighting upgrades and locations are represented in ***Appendix D.*** Cut sheets for the materials described in ***Table 10*** are provided in ***Appendix C***.

Table 10: Lighting Fixture Upgrades Summary

Luminaire Type	Qty	Existing Billable Wattage	Proposed Fixture Rated Wattage	Proposed Billable Wattage	Wattage Reduction Per Fixture
70W HPS Cobra head	134	86	24	25	61
100W HPS Cobra head	35	118	40	25	93
250W HPS Cobra head	18	304	76	75	229
100W Central Park Post Top	7	118	40	25	93
100W Aspen Grove Post Top	13	118	40	25	93
100W Traditional Post Top	37	118	40	25	93
150W Williamsville Post Top	37	173	40	25	148
Total	**281**				

Luminaire Type	Proposed Fixture Manufacturer	Proposed Fixture Model #
70W HPS Cobra head	Acuity	ATBS B MVOLT R3 MP W/ DLL127 1.5 J50 PC
100W HPS Cobra head	Acuity	ATBS E MVOLT R3 MP W/ DLL127 1.5 J50 PC
250W HPS Cobra head	Acuity	ATBS I MVOLT R3 MP W/ DLL127 1.5 J50 PC
100W Central Park Post Top	RemPhos	RPT-LEDSSEXT-4400LM-4000K
100W Aspen Grove Post Top	RemPhos	RPT-LEDSSEXT-4400LM-4000K
100W Traditional Post Top	RemPhos	RPT-LEDSSEXT-4400LM-4000K
150W Williamsville Post Top	RemPhos	RPT-LEDSSEXT-4400LM-4000K

Savings Summary

Savings for street lighting measures are based on two components:

- Energy savings associated with a reduction in energy consumption.
- Reduction in maintenance costs.

Figure 9: Proposed Billable Wattages

	Total Wattage Range									
Start:	0.1	50.1	100.1	150.1	200.1	250.1	300.1	350.1	400.1	450.1
End:	50.0	100.0	150.0	200.0	250.0	300.0	350.0	400.0	450.0	500.0
Light Source Type	Light Source Billable Wattage (Watts)									
Light Emitting Diode (LED)	25	75	125	175	225	275	---	---	---	---

3. Hours of Operation
Reference General Information, Section V.

Energy consumption savings are associated with the reduction in wattage from the existing lighting technology to LED lighting. Maintenance savings were calculated by subtracting an agreed upon annual maintenance cost allowance from the original "facility" charges.

$$\text{Energy Savings (kWh/yr)} = (kW_{before} - kW_{after}) * \text{Operating Hours (4,170)}$$

The existing wattages used in the calculations are based on the billed wattages in the SC-2 section of the current Street Lighting Tariff. The proposed wattage per fixture is billed at the 6 wattages listed in ***Figure 9*** and the SC-3 section of the street lighting tariff. For example if a proposed fixture is rated at 40 watts it will be billed by the utility at 25 watts because of 0.1W to 50.0W range it is in. The hours of operation for the lighting fixtures are unmetered and are stipulated by National Grid in the General

Information section of the Tariff. The table below represents the operating hours applied to each month to equal 4,170 hours per year.

Table 11: National Grid Stipulated Monthly Burn Hours

Month	Burn Hours
January	444
February[2]	368
March	362
April	305
May	275
June	246
July	264
August	301
September	334
October	393
November	421
December	457
Total	**4,170**

After purchase of the street lighting fixtures from National Grid all village owned fixtures included in this project will be moved into the SC-3 (Customer Owned, Customer Maintained) street lighting tariff from SC-2 (Utility Owned Utility Maintained) as outlined in ***Appendix E.***

The annual cost set aside for service of the new system will be $2,600. This money can be used by the village as needed for repairs or upkeep of the new system. SmartWatt will not be performing maintenance on the new street lighting system. In the event the funds are not used in a given year, the balance can be saved for future repairs.

In addition to the proposed service cost, National Grid requires a "pole attachment fee" stated in the tariff at a cost of $7.20/fixture per year. This results in an annual cost of $1,346 for the 187 cobra head fixtures that are connected to National Grid wooden poles. The table below represents the annual costs broken down for clarity:

[2] In the event of a leap year the hours change to 381 for February.

Table 12: Annual Street Light Savings Summary

Fee Type	Current Cost ($/yr)	Proposed Cost ($/yr)	Annual Savings ($/yr)
Energy Usage (kWh)	$17,372	$3,068	$14,304
Lamp/Pole/Circuit/Foundation Maintenance	$57,116	$2,600	$54,516
Pole Attachment Fee	-	$1,346	(-$1,346)
Total	**$74,488**	**$7,014**	**$67,474**

GIS Mapping

While on site SmartWatt engineers mapped the inventory of the fixtures through GIS software. SmartWatt has recorded a digital inventory of the current street lighting system. ***Figure 10*** represents a mapped screenshot of the recorded fixtures at the time of our visit. SmartWatt has provided a inventory of the baseline and proposed fixtures in ***Appendix D.*** This inventory will include GIS Coordinates to pinpoint fixture location with accuracy. The Village of Cazenovia can coordinate with SmartWatt to locate or update any fixtures in the scope of work. This list can be used for ease of access to the proposed fixtures in the even of service.

Figure 10: GIS Map

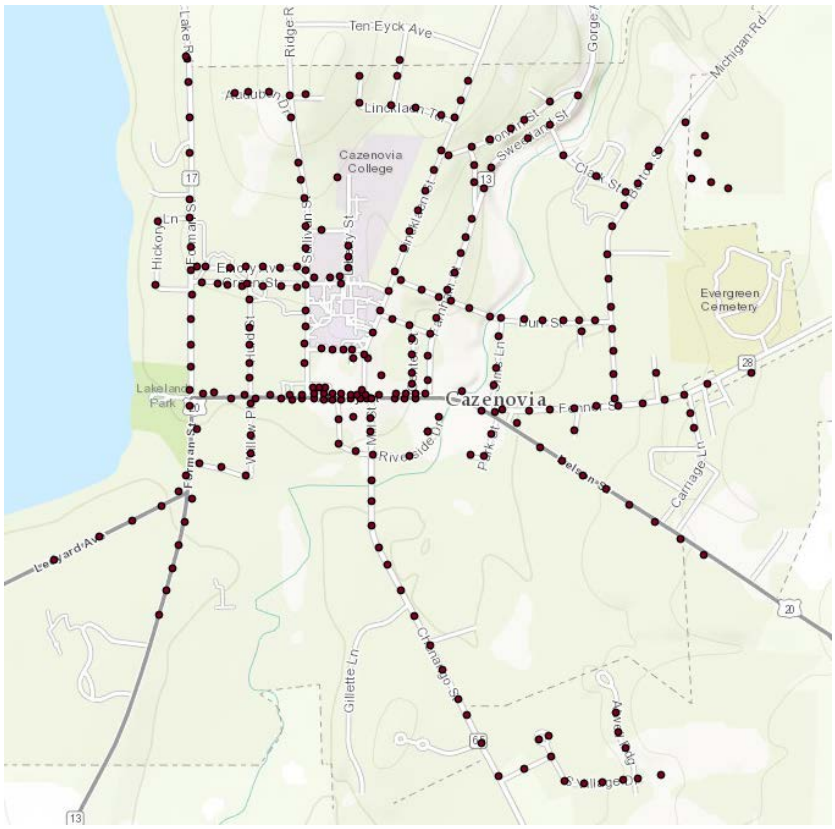

Baseline Usage and Cost

The energy baseline for this FIM is defined as the existing annual electric energy usage and facility charges for street lighting as shown in the table below.

Electrical Consumption (kWh/yr)	Electrical Annual Cost ($/yr)	Annual Facilities Charges ($/yr)	Total Annual Cost ($/yr)
142,835	$17,372	$57,116	$74,488

Post Retrofit Energy Use and Costs

The projected energy use and costs for this FIM are shown in the table below.

Electrical Consumption (kWh/yr)	Electrical Annual Cost ($/yr)	Annual Maintenance Cost ($/yr)	Pole Attachment Fee ($/yr)	Total Annual Costs ($/yr)
33,047	$3,068	$2,600	$1,346	$7,015

The savings are the difference between the Baseline and the Post Retrofit energy usage and cost savings as summarized in the table below.

Guaranteed Electrical Consumption Savings (kWh/yr)	Guaranteed Electrical Annual Cost Savings ($/yr)	Maintenance Cost Savings ($/yr)	Total Annual Cost Savings ($/yr)
109,788	$14,304	$53,170	$67,474

4.2 FIM #2: LED Lighting Upgrades

Annual Cost Savings	Avoided Maintenance Cost Savings	Implementation Cost
$1,537	$183	$26,590

Observation

The following buildings were evaluated for LED upgrades in this project:

- Village Hall
- DPW Garage

A detailed audit of the existing lighting was conducted at the two buildings listed above. A line-by-line audit, which details the existing conditions, is provided in ***Appendix B***.

Recommendation

SmartWatt will replace the existing lighting with LED lighting technology. The lighting upgrade includes:

- 6 exterior fixtures retrofitted with LED fixtures
- 196 interior fixtures retrofitted with LED fixtures

Table 13 provides a summary of the lighting upgrades by fixture type. Detailed summaries of the lighting upgrades and count for each fixture type and area-by-area detail are provided in ***Appendix B.*** Cut sheets for the materials described in ***Table 10*** are provided in ***Appendix C***.

Table 13: Lighting Fixture Upgrades Summary

Fixture Code	Quantity	Fixture Description
NLED/CAN/8"/14W	29	14W LED Can fixture
RL/LED10/A19LAMP	37	New LED TCP A19
RLRB/1LED10/N/PHILLIPS	6	Re-lamp and Re-ballast with 1 Philips LED tube
RLRB/2LED10/N/PHILLIPS	120	Re-lamp and Re-ballast with 2 Philips LED tube
RLRB/2LED8.5/N/PHILLIPS	1	Re-lamp and Re-ballast with 2 Philips LED tube
RLRB/4LED10/N/PHILLIPS	3	Re-lamp and Re-ballast with 4 Philips LED tube
Exterior Fixtures		
NLED/FL/125/TRUNNION	1	New LED RAB Trunnion Mount Fixture
NLED/WP/LED/24/RECT	3	New LED RAB Wall Pack
RK-LED-LANTERN	2	New LED Lantern Retrofit
Total	**202**	

Savings Summary

The existing and retrofit wattages are based on each fixture type. The hours of operation for the lighting fixtures were determined through the deployment of lighting data loggers. The loggers used record the current run hours of lamps as well as the occupancy during those times. A variety of space types were logged including offices, conference rooms, rest rooms, hallways, and other common areas.
To ensure the hours of operation for the period observed were typical for the spaces the lighting audit team interviewed Village staff. The hours of operation for the loggers were compared to the staff

interviews. The hours of operation retrieved from the light logger information matched well with the hours of operation obtained during the interviews of the occupants by building.
The energy savings for the retrofits that include a reduction in operating hours (e.g., occupancy sensors) are based on the following calculation:

kWh Saved = Qty * Unit kWbefore * Sensor Reduction Factor

The sensor reduction factor is based on data logger information that was recorded for various usage type areas. The annual operating cost savings are based on the replacement costs for ballasts and lamps as shown in the following calculation. Note that no labor savings are included, only material replacement costs. The replacement cost savings are shown in ***Table 14*** using the equation below.

Replacement Cost Savings = Quantity x Unit Annual Cost per Item

Table 14: Lighting Lamp Material Cost Savings

Components	Type	Avg Annual Run Hours	Avg Rated Life (hours)	Item Qty	Item Mat'l Cost	Item Life in Years	Unit Annual Cost per Item	Total Annual Line Item Cost
Fluorescent Lamp	Lamp	1,160	30,000	266	$3	25.9	$0.12	$30.86
HPS Lamp	Lamp	4,380	24,000	5	$65	5.5	$11.86	$59.31
Incandescent Lamp	Lamp	1,788	2,000	19	$1	1.1	$0.89	$16.99
Metal Halide Lamp	Lamp	4,380	30,000	1	$3	6.8	$0.44	$0.44
Fluorescent Ballast	Ballast	1,160	100,000	159	$28	86.2	$0.32	$51.64
HPS Ballast	Ballast	4,380	100,000	5	$105	22.8	$4.60	$23.00
Metal Halide Ballast	Ballast	4,380	100,000	1	$20	22.8	$0.88	$0.88
Total Annual Maintenance Costs for Existing Lamps and Ballasts								**$183.12**

Baseline Usage and Cost

The energy baseline for this FIM is defined as the existing annual electric energy usage for lighting is shown in the table below.

Electrical Consumption (kWh/yr)	Electrical Annual Cost ($/yr)	Total Annual Cost ($/yr)
20,290	$2,581	$2,764

Post Retrofit Energy Use and Cost

The projected energy use and cost for this FIM are shown in the table below.

Electrical Consumption (kWh/yr)	Electrical Annual Cost ($/yr)	Total Annual Cost ($/yr)
6,991	$873	$873

The savings are the difference between the Baseline and the Post Retrofit energy usage and cost savings as summarized in the table that follows. A safety factor of 0.90 was applied for this measure.

Guaranteed Electrical Consumption Savings (kWh/yr)	Guaranteed Electrical Annual Cost Savings ($/yr)	Avoided Maintenance Cost Savings ($/yr)	Total Annual Cost Savings ($/yr)
11,969	$1,537	$183	$1,721

Utility Incentives

SmartWatt will apply for incentives through National Grid's energy efficiency program. SmartWatt anticipates an incentive of $1,202 for this FIM.

4.3 FIM #3: Building Envelope Improvements

Annual Cost Savings	Implementation Cost
$361	$23,188

Facilities Affected

This FIM will be completed in the following facilities:

- Village Hall
- DPW Garage

Observation

A detailed review of each of the above facilities was conducted by a building envelope specialist from ECP Inc. Several areas with significant infiltration were discovered as described in the scope below.

Recommendation

This measure incorporates a number of strategies designed to reduce infiltration of the building envelope. The scope of work for each building is provided below:

Village Hall

Doors

- Install weather-stripping on 1 single door.
- Install weather-stripping on 2 double doors.

Windows

- 309 linear feet of interior window perimeter to be caulked.

DPW Garage

Doors

- Install weather-stripping on 3 single doors (with 2 to have thresholds to be installed)
- Install weather-stripping on 5 overhead doors totaling 260 linear feet.

Roof/Wall

- Install weather-stripping on 340 linear feet of roof wall joint.
- Seal 20 linear feet of exterior CMU block walls.

The following materials have been specified for use in the weatherization of Village of Cazenovia. Specification sheets for these materials are provided in ***Appendix C***.

Single/Double Door Weather-Stripping

- ECP Aluminum Door Carrier (QDS 650 Retainer)
- Schlegel QLON-QDS 650 Polyethylene Clad Urethane Foam Gasket
- Schlegel QLON-QFS 375 Polyethylene Clad Urethane Foam Gasket w/ adhesive backer
- 3M Super 77 Multipurpose Spray Adhesive
- Schlegel Door Sweep with Fin Seal
- DAP Alex Plus Acrylic Latex Caulk Plus Silicone (clear)

Overhead/Roll-Up Garage Door Weather-Stripping

- Sealeze Nylon Brush Weather-Seal with EPDM Fin Seal Gasket
- Action Industries Aluminum Bottom Overhead Door Retainer ("T" Rubber Retainer)
- Action Industries Bottom "T" Rubber Seal
- DAP Alex Plus Acrylic Latex Caulk plus Silicone (clear)

Roof/Wall Joint and Soffit Joint Air-Sealing

- Convenience Products Touch'nSeal CPDS 750FR (2 part foam)

Savings Summary

Based on the results of the envelope inspection an infiltration (leakage rate) was determined for the items to be corrected. By reducing infiltration the rate of heat transfer is reduced, resulting in energy savings. To estimate energy savings a spreadsheet model was developed to determine the leakage rate, thermal losses, heating energy savings, and cooling energy savings. The spreadsheet model results are presented in ***Appendix B***.

Baseline Usage and Cost

The energy baseline for infiltration losses is defined as the existing crack area for infiltration and the associated energy wasted for the affected HVAC systems as shown in the table below. The baseline electric and fuel rates in ***Table 5*** are applied.

Crack Area (ft^2)	Electrical Consumption (kWh/yr)	Electrical Annual Cost ($/yr)	Natural Gas Consumption (therm/yr)	Natural Gas Annual Cost ($/yr)
5.2	543	$55	507	$306

Post Retrofit Energy Use and Cost

The post retrofit conditions assume that the total crack area will be sealed and the energy losses associated with infiltration will be reduced to zero.

Guaranteed Electrical Consumption Savings (kWh/yr)	Guaranteed Electrical Annual Cost Savings ($/yr)	Guaranteed Natural Gas Consumption Savings (therm/yr)	Guaranteed Natural Gas Annual Cost Savings ($/yr)	Total Annual Cost Savings ($/yr)
543	$55	507	$306	$361

4.4 FIM #4: RTU Replacements

Annual Utility Savings	Avoided Maintenance Cost Savings ($/yr)	Implementation Cost
$548	$3,271	$65,412

Facilities Affected

This FIM will be completed at the Village Hall to replace the existing roof top units.

Observation

The City Hall Building utilizes (2) roof top units to provide heating and cooling to the majority of the first floor and various areas located in the basement. The units are labeled RTU-1 and RTU-2 and are summarized in Table 15. The units were installed in 1989 and have exceeded their expected useful lives.

Table 15: Existing Rooftop Units

Existing Rooftop Unit Model Summary				
Unit Tag	Voltage	Phase	Manufacturer	Model
RTU-1	208	3	Carrier	48 DJD 009
RTU-2	208	3	Carrier	48 DJD 007

Recommendation

SmartWatt will replace the two (2) existing rooftop units (RTUs) with new units manufactured by Carrier. SmartWatt will provide the appropriate adapter curb and ductwork arrangements as needed for a fully functional system. Data sheets for the new RTUs are provided in **Appendix C**.

The Scope of Work is summarized below:

- Provide stamped engineering drawings for complete installation
- Remove each of the existing RTUs
- Install new adapter curb and ductwork as required
- Install new Carrier RTUs
- Install all electrical wiring to make operational
- Replace existing thermostats with new programmable thermostats.
- Provide factory start-up, as well as testing, adjustment and balancing of system (TAB)
- Instruct owner's designated operators on the operation and maintenance of the new equipment

Savings Summary

Savings associated with replacing the RTUs are through an increase in the efficiency of the units from an average EER of 8.00 to a value of 12 for the new units for cooling. Energy savings associated with an increase in EER are calculated as follows:

$$Energy\ Savings\ \left(\frac{kWh}{yr}\right) = Current\ Usage - Proposed\ Usage$$

$$Current\ Usage = \frac{Cooling\ Tonnage\ x\ 12{,}000\frac{Btuh}{ton}\ x\ EFLCH\ x\ \frac{1\ kW}{1{,}000\ Watts}}{Current\ EER}$$

Where,
EFLCH = Equivalent Full Load Cooling Hours = 768 hrs/yr (based on NYS Technical Manual)

$$Current\ Usage = \frac{14.5\ tons\ x\ 12{,}000\frac{Btuh}{ton}\ x\ 768\frac{hr}{yr}\ x\frac{1kW}{1{,}000\ Watts}}{8.00\ Btuh/Watt} = 16{,}704\ kWh/yr$$

$$Proposed\ Usage = \frac{Cooling\ Tonnage\ x\ 12{,}000\frac{Btuh}{ton}\ x\ EFLCH\ x\ \frac{1\ kW}{1{,}000\ Watts}}{Proposed\ EER}$$

$$Proposed\ Usage = \frac{14.5\ tons\ x\ 12{,}000\frac{Btuh}{ton}\ x\ 768\frac{hr}{yr}\ x\frac{1kW}{1{,}000\ Watts}}{12\ Btuh/Watt} = 11{,}136\ kWh/yr$$

$$Energy\ Savings\ \left(\frac{kWh}{yr}\right) = 16{,}704\frac{kWh}{yr} - 11{,}136\frac{kWh}{yr} = 5{,}568\ kWh/yr$$

Heating savings associated with replacing the RTUs are though a minor increase in heating efficiency. The existing units are at end of life and the efficiency has since degraded. Energy savings associated with an increase in heating efficiency are calculated as follows:

$$Heating\ Savings\ \left(\frac{Therm}{yr}\right) = Current\ Usage - Proposed\ Usage$$

$$Current\ Usage = \frac{\frac{Capaciity\ (Btuh)\ \ x\ EFLHH}{\frac{Btuh}{therm}}}{heating\ efficiency\ \%} = Therm/yr$$

$$Current\ Usage = \frac{\frac{194{,}000\ (Btuh)\ \ x\ 750\frac{hrs}{yr}}{100{,}000\frac{Btuh}{therm}}}{80\ \%} = 1{,}814\ Therm/yr$$

$$Proposed\ Usage = \frac{\dfrac{194{,}000(Btuh)\ \ x\ 750\dfrac{hrs}{yr}}{100{,}000\dfrac{Btuh}{therm}}}{81\ \%} = 1{,}796\ Therm/yr$$

$$Energy\ Savings\ \left(\frac{Therm/yr}{yr}\right) = 1{,}814\frac{therm}{yr} - 1{,}796\frac{therm}{yr} = \ 17\ therm/yr$$

Repair and replacement savings are associated with the reduction in future costs for replacing the RTUs which are at end of life. The replacement savings was determined by taking 50% of the total measure cost and distributing it as savings over the length of the 10 year term.

Baseline Usage and Cost

The energy baseline for this FIM is defined as the existing annual electric energy usage for the RTUs at the Village Hall as shown in the table below.

Electrical Consumption (kWh/yr)	Electrical Annual Cost ($/yr)	Natural Gas Consumption (Therm/yr)	Natural Gas Annual Cost ($/yr)	Total Annual Cost ($/yr)
16,704	$1,698	1,814	$1,077	$6,046

Post Retrofit Energy Use and Cost

The projected energy use and cost for this FIM are shown in the table below.

Electrical Consumption (kWh/yr)	Electrical Annual Cost ($/yr)	Natural Gas Consumption (Therm/yr)	Natural Gas Annual Cost ($/yr)	Total Annual Cost ($/yr)
11,136	$1,132	1,796	$1,066	$2,198

The savings are the difference between the Baseline and the Post Retrofit energy usage and cost savings as summarized in the table that follows. A safety factor of 0.95 was applied for this measure.

Guaranteed Electrical Consumption Savings (kWh/yr)	Guaranteed Electrical Annual Cost Savings ($/yr)	Guaranteed Natural Gas Savings (Therm/yr)	Guaranteed Natural Gas Cost Savings ($/yr)	Annual Maintenance Cost Savings ($/yr)	Total Annual Cost Savings ($/yr)
5,290	$538	17	$10	$3,271	$3,819

4.4 FIM #5: DX Cooling System Upgrades

Annual Utility Savings	Avoided Maintenance Cost Savings ($/yr)	Implementation Cost
$469	$1,993	$39,858

Facilities Affected

This FIM will be completed in the Fire Station to replace the existing direct expansion air conditioning units.

Observation

The Fire Station utilizes (2) direct expansion cooling units to provide cooling to the majority of the occupied spaces except for the garage. The units are labeled AC-1 and AC-2 and are summarized in Table 16. The units were installed in the early 1990's and have exceeded their expected useful lives.

Table 16: Existing AC Unit Summary

Existing Rooftop Unit Model Summary				
Unit Tag	**Voltage**	**Phase**	**Manufacturer**	**Model**
AC-1	208	1	Trane	TTB024C100A2
AC-2	208	3	Trane	No Tag – 5 tons

Recommendation

SmartWatt will replace the two (2) existing direct expansion AC units with new units manufactured by Carrier. New units will be high efficiency units. SmartWatt will replace the existing indoor AC coils for each corresponding outdoor unit. In addition, SmartWatt will install programmable thermostats in place of each existing thermostat. SmartWatt will provide the appropriate ductwork arrangements as needed for a fully functional system. Data sheets for the new AC units are provided in **Appendix C.**

The Scope of Work is summarized below:

- Remove each of the existing units
- Install (2) new Carrier condensing units and interior A-coil
- Install all electrical wiring to make system operational
- Install new programmable thermostats
- Provide factory start-up, as well as testing, adjustment and balancing of system (TAB)
- Instruct owner's designated operators on the operation and maintenance of the new equipment

Savings Summary

Savings associated with replacing the AC units are through an increase in the efficiency of the units from an average EER of 7.00 to a value of 12 for the new units for cooling. Energy savings associated with an increase in EER are calculated as follows:

$$Energy\ Savings\ \left(\frac{kWh}{yr}\right) = Current\ Usage - Proposed\ Usage$$

$$Current\ Usage = \frac{Cooling\ Tonnage\ x\ 12{,}000\frac{Btuh}{ton}\ x\ EFLCH\ x\ \frac{1\ kW}{1{,}000\ Watts}}{Current\ EER}$$

Where,

EFLCH = Equivalent Full Load Cooling Hours = 553 hrs/yr (based on NYS Technical Manual)

$$Current\ Usage = \frac{8.7\ tons\ x\ 12{,}000\frac{Btuh}{ton}\ x\ 553\frac{hr}{yr}\ x\frac{1kW}{1{,}000\ Watts}}{7.00\ Btuh/Watt} = 8{,}286\ kWh/yr$$

$$Proposed\ Usage = \frac{Cooling\ Tonnage\ x\ 12{,}000\frac{Btuh}{ton}\ x\ EFLCH\ x\ \frac{1\ kW}{1{,}000\ Watts}}{Proposed\ EER}$$

$$Proposed\ Usage = \frac{8.7\ tons\ x\ 12{,}000\frac{Btuh}{ton}\ x\ 553\frac{hr}{yr}\ x\frac{1kW}{1{,}000\ Watts}}{12\ Btuh/Watt} = 4{,}833\ kWh/yr$$

$$Energy\ Savings\ \left(\frac{kWh}{yr}\right) = 8{,}286\frac{kWh}{yr} - 4{,}833\frac{kWh}{yr} = 3{,}454\ kWh/yr$$

Repair and replacement savings are associated with the reduction in future costs for replacing the air conditioning units which are at end of life. The replacement savings was determined by taking 50% of the total measure cost and distributing it as savings over the length of the 10 year term.

Baseline Usage and Cost

The energy baseline for this FIM is defined as the existing annual electric energy usage for the air conditioning units at the Fire Station as shown in the table below.

Electrical Consumption (kWh/yr)	Electrical Annual Cost ($/yr)	Total Annual Cost ($/yr)
8,286	$1,187	$3,180

Post Retrofit Energy Use and Cost

The projected energy use and cost for this FIM are shown in the table below.

Electrical Consumption (kWh/yr)	Electrical Annual Cost ($/yr)	Total Annual Cost ($/yr)
4,833	$692	$692

The savings are the difference between the Baseline and the Post Retrofit energy usage and cost savings as summarized in the table that follows. A safety factor of 0.95 was applied for this measure.

Guaranteed Electrical Consumption Savings (kWh/yr)	Guaranteed Electrical Annual Cost Savings ($/yr)	Avoided Maintenance Cost Savings ($/yr)	Total Annual Cost Savings ($/yr)
3,279	$469	$1,993	$2,462

4.5 FIM #6: Boiler Upgrades

Annual Utility Savings	Avoided Maintenance Cost Savings ($/yr)	Implementation Cost
$234	$1,908	$39,367

Facilities Affected

This FIM will be completed in the Fire Station to replace the existing boiler with new condensing boilers.

Observation

The Fire Station boiler feeds hot water to twenty-one (21) fin tube radiators located in all areas except for the garage. The boiler is a 175 MBH Peerless boiler with a combustion efficiency of about 80%. The boiler is approaching the end of its useful life.

Recommendation

SmartWatt will remove and replace the existing natural gas fired boiler with a new condensing unit manufactured by Weil McLain. New unit will be high efficiency. SmartWatt will provide all equipment, material, and installation costs for the turnkey replacement of the boiler. Product data sheets for the boiler is provided in **Appendix C.**

The Scope of Work is summarized below:

- Remove and demolish existing boiler
- Purchase and install (1) Weil McLain Model EVG 220 condensing boiler.
- Install all manufacturer accessories including temperature wells and sensors.
- Install all electrical wiring to make system operational.
- Provide factory start-up, testing and adjustment of the new system.
- Instruct owner's designated operators on the operation and maintenance of the new equipment.
- Install condensate neutralization kit and route condensate to the nearest drain.
- Program and make operational outdoor air reset feature integrated into the new boiler.
- Install new programmable thermostats for the three (3) corresponding hot water zones.

Savings Summary

Savings associated with replacing the boiler is through increased combustion efficiency of the units. The current boiler has a combustion efficiency of about 80% and an overall system efficiency of about 71%. The proposed boiler has a combustion efficiency range of 89-99% depending on if the boiler is in condensing mode (primarily a factor of return water temperature). For this facility, the average post installation combustion efficiency was estimated to be 94% and the overall efficiency at 85%. The savings were calculated by applying the increase in efficiency to the baseline natural gas usage for space

heating as shown in the equations below. The part load factor was estimated to be 10% to be conservative.

$$Annual\ NG\ Savings = Baseline\ NG\ Use - Proposed\ NG\ Use$$

$$Baseline\ NG\ Use = \frac{Boiler\ Capacity\ x\ Operatng\ Hours\ x\ Part\ Load\ Factor}{Baseline\ Overall\ Efficiency\ x\ 100\ MBH/therm}$$

$$Baseline\ NG\ Use = \frac{175\ MBH\ x\ 1{,}085\ hr/yr\ x\ 0.10}{0.072\ x\ 100\ MBH/therm} = 2{,}505\ therm/yr$$

$$Proposed\ NG\ Use = \frac{Boiler\ Capacity\ x\ Operatng\ Hours\ x\ Part\ Load\ Factor}{Proposed\ Overall\ Efficiency\ x\ 100\ MBH/therm}$$

$$Proposed\ NG\ Use = \frac{174\ MBH\ x\ 1{,}085\ hr/yr\ x\ 0.10}{0.0846x\ 100\ MBH/therm} = 2{,}132\ therm/yr$$

$$Annual\ NG\ Savings = 2{,}505 - 2{,}132 = 373\ therm/yr$$

Repair and replacement savings are associated with the reduction in future costs for replacing the boiler which is approaching end of life. The replacement savings was determined by taking 50% of the total measure cost and distributing it as savings over the length of the 10 year term.

Baseline Usage and Cost

The energy baseline for this FIM is defined as the existing annual gas usage for the boiler at the Fire Station as shown in the table below.

Natural Gas Consumption (Therm/yr)	Natural Gas Annual Cost ($/yr)	Total Annual Cost ($/yr)
2,505	$1,651	$3,559

Post Retrofit Energy Use and Cost

The projected energy use and cost for this FIM are shown in the table below.

Natural Gas Consumption (Therm/yr)	Natural Gas Annual Cost ($/yr)	Total Annual Cost ($/yr)
2,132	$1,405	$1,405

The savings are the difference between the Baseline and the Post Retrofit energy usage and cost savings as summarized in the table that follows. A safety factor of 0.95 was applied for this measure.

Guaranteed Natural Gas Consumption Savings (Therm/yr)	Guaranteed Natural Gas Annual Cost Savings ($/yr)	Annual Maintenance Cost Savings ($/yr)	Total Annual Cost Savings ($/yr)
354	$234	$1,908	$2,142

5.0 Measurement & Verification Plan

5.1 M&V Plan Overview

The purpose of the Measurement and Verification (M&V) Plan is to identify the methods, measurements, and procedures and tools that will be used to verify the Savings for each FIM. A performance guarantee contract will be executed between the Village and SmartWatt.

Measurement and verification of energy savings will be based on the International Performance Measurement and Verification Protocol (IPMVP) Option A - Retrofit Isolation: Key Parameter Measurement for FIM #2 through FIM #6 and Option C – Whole Facility, for FIM #1 (Street Lighting Upgrades). This plan was developed by Ryan Urschel, Certified Measurement & Verification Professional (CMVP).

Option A as defined by IPMVP, Volume I, 2012 is provided below:

Option A - Retrofit Isolation: Key Parameter Measurement. Savings are determined by field measurement of the key performance parameter(s) which define the energy use of the FIMs affected system(s) and/or the success of the Project. Measurement frequency ranges from short-term to continuous, depending on the expected variations in the measured parameter and the length of the reporting period. Parameters not selected for field measurement are estimated. Estimates can be based on historical data, manufacturer's specifications, or engineering judgment. Documentation of the source or justification of the estimated parameter is required. The plausible savings error arising from estimation rather than measurement is evaluated.

Option C as defined by IPMVP, Volume I, 2012 is provided below:

Option C – Whole Facility: Savings are determined by measuring energy use at the whole facility or sub-facility level. In this case, this will be the street lighting utility bills for the baseline and reporting period. Continuous measurements of the energy use are taken after the first year of substantial completion. All of the street lighting is unmetered and therefore the hours of operation and fixture wattage are stipulated in the tariff.

The following table summarizes the baseline and post-implementation consumption and the guaranteed energy usage savings.

Table 17: Year 1 Total Energy Savings

	Annual Consumption Before	Annual Consumption After	Guaranteed Usage Savings
Electricity (kWh)	234,583	103,714	130,869
Natural Gas (Therm)	10,958	10,079	879

The energy reduction for each FIM is summarized in Table 19.

Table 18: Year 1 Energy Usage Savings by FIM

FIM	Electric Usage Savings (kWh/yr)	Natural Gas Savings (Therms/yr)
1 – Street Lighting Upgrades	109,788	-
2 – LED Lighting Upgrades	11,967	-
3 – Building Envelope Improvements	543	507
4 - RTU Replacements	5,290	17
5 – DX Cooling System Upgrades	3,281	-
6 – Boiler Improvements	-	354
Total Savings	**130,869**	**879**

REPAIR AND REPLACEMENT SAVINGS. Table 20 identifies the annual savings throughout the project term. The street lighting maintenance savings are associated with the elimination of the maintenance fees associated with the existing street lighting system that was owned and operated by National Grid. In addition $7,172 in annual maintenance savings are associated with the end of life replacement costs allocated to the mechanical measures. The proposed maintenance costs are associated with an annual street lighting maintenance cost amount set aside of ($2,600). SmartWatt will not be performing the maintenance on the new street lighting system. In addition there will be charges for a pole attachment fee ($1,346). There are $60,523 in annual maintenance savings that will endure for the life of the term and will be escalated annually. This includes the annual pole attachment fee. These stipulated savings will not be measured or verified during the term.

UTILITY ESCALATION RATES. Annual energy savings are escalated using the following annual escalation rates:

Table 19: Utility Escalation Rates

Electric Energy Savings Escalation Rate	3.00%
Natural Gas Energy Savings Escalation Rate	3.00%

TOTAL ANNUAL COST SAVINGS. The total annual savings for each year of the term applying the applicable escalation rates is provided in Table 20. The energy cost savings are calculated by multiplying the energy savings by the baseline rates described in Section 3.2. The savings guarantee does not operate to guarantee the savings per FIM. Rather, the calculation of savings is based on aggregate performance of all of the FIMs contained in the project.

Table 20: Annual Cost Savings for Contract Term

Annual Period	Guaranteed Utility Cost Savings	Stipulated Repair & Replacement Cost Savings[3]	Total Savings
Year 1	$17,453	$60,523	$77,796
Year 2	$17,977	$62,339	$80,316
Year 3	$18,516	$64,209	$82,725
Year 4	$19,071	$66,135	$85,206
Year 5	$19,644	$68,119	$87,763
Year 6	$20,233	$70,163	$90,396
Year 7	$20,840	$72,268	$93,108
Year 8	$21,465	$74,436	$95,901
Year 9	$22,109	$76,669	$98,778
Year 10	$22,772	$78,969	$101,741

5.2 Baseline: Energy and Operating Conditions

BASELINE PERIOD. The baseline period is Calendar Year 2016 (January 1 – December 31, 2015) for the Village Hall, Fire House, and DPW Building. The street lighting baseline period is based upon the present (2017) National Grid Street Lighting Tariff and verified inventory as shown in Appendix D.

BASELINE UTILITY CONSUMPTION. Twelve months of utility data were compiled for the buildings in the project. The annual utility baseline data is provided in Table 22.

Table 21: Baseline Utility Usage Summary

Facility	Electric Usage (kWh/yr)	Natural Gas Usage (therm/yr)
Street Lighting	142,835	-
Village Hall	42,789	4,051
Fire Station	27,000	3,391
DPW Garage	21,959	3,516
Total	**234,583**	**10,958**

BASELINE UTILITY RATES. The utility rates presented in Table 23 are the current rates for distribution and supply of utilities at the time of this agreement and shall be used to calculate savings associated with the reduction of electricity and natural gas in Year 1. After Year 1, these stipulated utility rates shall be increased by the utility escalation rates described in Section 5.1 to calculate the savings in each subsequent year after Year 1.

[3] This includes the proposed street lighting maintenance allowance and pole attachment fee

Table 22: Baseline Utility Rates

Building	Electricity Distribution ($/kWh)	Electricity Supply ($/kWh)	Electricity Total ($/kWh)
Street Lighting	$0.0988	$0.0228	$0.1216
Village Hall	$0.0590	$0.0427	$0.1017
Fire Station	$0.1025	$0.0407	$0.1432
DPW	$0.1005	$0.0400	$0.1405

Building	NG Distribution ($/therm)	NG Supply ($/therm)	NG Total ($/therm)
Village Hall	$0.2746	$0.3190	$0.5936
Fire Station	$0.3886	$0.2703	$0.6589
DPW	$0.2777	$0.3328	$0.6104

BASELINE OPERATING CONDITIONS. Baseline operating conditions provide a summary of the building use, equipment and operating modes during the baseline period. No significant changes are expected related to these conditions; however, if a change occurs in these conditions, the baseline energy usage may be adjusted (permanently or temporarily).

Table 23: Baseline Operating Conditions

Building	Address	Square Footage	Weekday Operating Schedule	Weekend Operating Schedule
Village Hall	90 Albany Street	12,737	8AM- 5PM	Closed
Fire Station	127 Albany St	3,912	24/7 (intermittent Use)	24/7 (intermittent Use)
DPW Garage	27 William St	5,654	7AM – 3PM	Closed (unless emergency, snowstorm etc.)

Building	Occupied Space Heating Setpoint	Unoccupied Space Heating Setpoint	Occupied Space Cooling Setpoint	Unoccupied Space Cooling Setpoint
Village Hall	70	65	74	78
Fire Station	70	65	74	74
DPW Garage	64	60	-	-

INDEPENDENT VARIABLES. Independent variables include factors that can affect the facility's energy consumption. The largest independent variable is typically weather. For example, an abnormally cold winter will result in additional heating and natural gas consumption. A safety factor has been applied to the calculations to minimize the effect of abnormal weather conditions but if a change occurs outside the range of the safety factor, the baseline energy usage may be adjusted for that particular heating or cooling season.

The relevant independent weather variable is average monthly outside air temperature. The average outside air temperature for the baseline period and 30 year BIN data (From the BinMaker Pro Software package) as well as the average temperature during the baseline period are provided in Table 25. Weather BINS are from the Syracuse Airport. The source of the baseline average temperature data is the weather station in Syracuse, NY.

Table 24: Baseline Period Outside Air Temperature

Period		Baseline Average Outside Air Temperature (°F)	30 Year Bin Temperature Data (°F)
From	To		
1/1/2016	1/31/2016	26	26
2/1/2016	2/28/2016	28	25
3/1/2016	3/31/2016	40	38
4/1/2016	4/30/2016	43	48
5/1/2016	5/31/2016	58	60
6/1/2016	6/30/2016	67	67
7/1/2016	7/31/2016	74	72
8/1/2016	8/31/2016	74	68
9/1/2016	9/30/2016	65	61
10/1/2016	10/31/2016	52	49
11/1/2016	11/30/2016	42	41
12/1/2016	12/31/2016	30	28

5.3 M&V Method by FIM

FIM-1: Street Lighting Upgrades

SmartWatt will replace the existing HPS cobra head street lighting with LED lighting technology equipped with photo-eye controls. SmartWatt will retrofit existing post top fixtures with LED retro kits. SmartWatt will replace existing damaged wiring connecting the fixture to the utility pole for up to 25% of the fixtures and install National Grid approved in-line disconnecting device.

M&V Option

Option C was selected to provide a cost effective means to evaluate savings.

Overview of M&V Activities

M&V for this FIM will be performed in year 1 ONLY. The street lighting utility bills for account ending in #105 will be measured. This includes the maintenance fees associated with the street lighting in the baseline and reporting period.

Pre-FIM Measurements

1. Annual electric consumption and maintenance fees for the current system using the current street lighting tariff published by National Grid. The utility rates represented in Table 22 will be used.

The table below summarizes the lighting operating hours by month for street lighting. This information is located in the "General Information" section of the most recent National Grid street lighting tariff.

Street Lighting Operating Hours by Month

Month	Burn Hours
January	444
February[4]	368
March	362
April	305
May	275
June	246
July	264
August	301
September	334
October	393
November	421
December	457
Total	**4,170**

The table below represents the monthly unit cost associated with the current street lighting system:

Fixture Type	Billed Lamp Wattage	Quantity	Monthly Lamp Charge ($/item)	Monthly Luminaire Charge ($/item)	Total Monthly Cost $
HPS Cobra Head	86	134	$0.6658	$4.471	$688.76
HPS Cobra Head	118	35	$0.6658	$4.471	$179.78
HPS Cobra Head	304	18	$0.6808	$5.251	$106.77
HPS Central Park Post Top	118	7	$0.6658	$10.538	$78.43
HPS Aspen Grove Post Top	118	13	$0.6658	$8.641	$121.00
HPS Traditional Post Top	118	37	$0.6658	$4.154	$178.33
HPS Williamsville Post Top	173	37	$0.6658	$9.924	$392.82
Total		**281**			**$1,744.89**

[4] In the event of a leap year the hours change to 381 for February.

Item Type	Quantity	Monthly Item Charge ($/item)	Total Monthly Cost $
Metal Pole Outlet	39	$3.9759	$155.00
Residential Direct Burial Cable	27	$7.3317	$197.96
Direct Burial Cable and Conduit	69	$9.8550	$680.00
Foundations	23	$17.953	$412.92
Fiberglass Presidential Pole	7	$13.041	$91.29
Fiberglass Standard Pole - DE	27	$7.690	$207.63
Fiberglass Standard Pole - AB	19	$5.595	$106.31
Aluminum Armory Square Pole	39	$27.95	$1,090.25
Aluminum Standard Pole – AB	1	$21.06	$21.06
Aluminum Villager Pole	1	$9.3167	$9.32
Steel Pole – Standard	2	$21.695	$43.39
Total	**254**		**$3,015.17**

Post-FIM Measurements

1. Annual Electric Consumption 1 year after substantial completion and proposed fixtures are placed in the SC-3 rate schedule of the National Grid street lighting tariff. The utility rates represented in Table 22 will be used.

The table below represents the billed wattage that will be used in the calculation for the reporting period:

Luminaire Type	Proposed Fixture Model #	Proposed Fixture Billed Wattage
70W HPS Cobra head	ATBS B MVOLT R3 MP W/ DLL127 1.5 J50 PC	25
100W HPS Cobra head	ATBS E MVOLT R3 MP W/ DLL127 1.5 J50 PC	25
250W HPS Cobra head	ATBS I MVOLT R3 MP W/ DLL127 1.5 J50 PC	75
100W Central Park Post Top	RPT-LEDSSEXT-4400LM-4000K	25
100W Aspen Grove Post Top	RPT-LEDSSEXT-4400LM-4000K	25
100W Traditional Post Top	RPT-LEDSSEXT-4400LM-4000K	25
150W Williamsville Post Top	RPT-LEDSSEXT-4400LM-4000K	25

Non-Routine Baseline Adjustment

In the event that the facility adds/removes/shuts down equipment or changes its operations, data will be collected from drawings/specifications/site information or short term measurement campaigns. This procedure will be based on the impact of such changes on static factors. Adjustments will be defined as

either temporary (applicable to a portion of the reporting period) or permanent (remains in effect for the rest of the reporting period).

FIM-2: Lighting Improvements

SmartWatt will replace the existing T12 and T8 lighting with LED lighting technology. In addition, SmartWatt will replace the existing HID exterior lighting with LED lighting.

M&V Option

Option A was selected to provide a cost effective means to evaluate savings.

Overview of M&V Activities

M&V for this FIM will be performed in Year 1 ONLY. The key parameter to be measured will be power draw of a representative sample for baseline and post-implementation fixtures.

Pre-FIM Measurements

1. Count of existing fixture types (Appendix D)
2. Fixture wattage for a representative sample
3. Lighting operating hours by space type

The table below summarizes the lighting operating hours by building and space type based on the results of data loggers which measure the hours the lights are on as well as the hours the space is occupied. An average of all space types for each building was used for purposes of the calculations. These same hours will be used for the post-implementation savings calculation.

Building	Hours/ Year
Village Hall	1,038
Village Hall - Low Usage (storage)	183
DPW Garage	1,976
Exterior	4,380

Post-FIM Measurements

1. Count of each fixture type
2. Identification and documentation of each fixture type
3. Fixture wattage for a representative sample
4. Visual inspection of all units in and verification of wattage rating by referencing specification sheets for each fixture type

Sample Size for Power Measurements.

Pre and Post-FIM power will be measured once at the fixture level by fixture types that make up the majority of the energy savings. Five fixture types account for 98% of the total energy savings. Estimated sample sizes for these fixture types assuming a coefficient of variation (Cv) of 0.5, 20% Precision, and 80% Confidence are shown in the table that follows.

Fixture Type	Quantity	Sample Size
RLRB/2LED10/N/Phillips	120	10
RL/LED10/A19Lamp	37	9
NLED/FL/125/Trunnion	1	1
NLED/WP/LED/24/RECT	3	3
RK-LED-Lantern	2	2

Stipulated Parameters

1. Hours of operation for exterior lighting shall be 4,380 hours per year (dusk to dawn)
2. 20% reduction in hours for occupancy sensors installed

Savings Calculation Method

To calculate energy and cost savings for all interior lighting FIMs, the following equations shall be used.

$$kWh\ Savings\ =\ (Baseline\ kWh - Post\ Install\ kWh)$$

$$Baseline\ KW\ =\ \left(\frac{Fixture\ Count\ *\ Fixture\ Wattages}{1000}\right)$$

$$Baseline\ kWh\ =\ (Baseline\ KW\ *Operating\ Hours\ of\ Operation)$$

$$Post\ Install\ KW\ =\ \left(\frac{Fixture\ Count\ *\ Fixture\ Wattages}{1000}\right)$$

$$Post\ Install\ kWh\ =\ (Post\ Install\ KW\ *\ Hours\ of\ Operation)$$

$$Cost\ Savings\ =\ (kWh\ Savings\ *\ \frac{\$}{kWh}\ Rate)$$

FIM-3: Building Envelope Improvements

SmartWatt will seal building cracks and gaps as described in FIM-3 to reduce building infiltration.

M&V Option

Option A was selected to provide a cost effective means to evaluate savings.

Overview of M&V Activities

M&V for this FIM will be performed in Year 1 ONLY. A visual inspection will be performed to ensure the scope of work items as described in the FIM-3 description in Section 4 of this IGA report were completed. No further annual M&V will be performed.

Pre-FIM Measurements

1. Size of cracks at doors and gaps in buildings
2. Space temperature set-points

Post-FIM Measurements

1. Visual inspection of doors and gaps to ensure cracks are eliminated

Stipulated Parameters

Stipulated parameters were based on current equipment nameplates, drawings, and engineering estimates as defined in the table that follows for each building.

Building Envelope Upgrades	
% Infiltration to Exfiltration	50%
Wind Velocity	8.6 mph
Heating Efficiency	Varies by Building See Appendix B
Cooling Efficiency	Varies by Building See Appendix B
Outside Air Temperature	BIN Maker Plus for Syracuse, NY
Heating and Cooling Season Hours	BIN Maker Plus for Syracuse, NY
Supply Air Enthalpy	Psychometric Chart
Outside Air Enthalpy	Bin Maker Plus for Syracuse, NY
Stack Coefficient	Table in Appendix B
Wind Coefficient	Table in Appendix B
Shielding Class	Table in Appendix B

Savings Calculation Method

Energy savings are calculated with an energy model based on the reduction in infiltration. The calculation is provided in Appendix B.

$$Annual\ Energy\ Savings = Baseline\ Infiltration\ Energy\ Loss - Post\ Installation\ Energy\ Loss$$

$$\begin{aligned} Annual\ \$\ Savings \\ &= Annual\ NG\ Savings\ \times \frac{\$}{Therm} Rate + \ Annual\ kWh\ Savings\ \times \frac{\$}{kWh} Rate \\ &+ Annual\ Propane\ Savings\ x \frac{\$}{gal} Rate + Annual\ Fuel\ Oil\ Savings\ x \frac{\$}{gal} Rate \end{aligned}$$

FIM-4: RTU Replacements

SmartWatt will replace two (2) roof top units (RTU-1, and RTU-2) with new Carrier units.

M&V Option

Option A was selected to provide a cost effective means to evaluate savings.

Overview of M&V Activities

M&V for this FIM will be performed during the odd years throughout the length of the term. Savings are achieved through an increase in unit efficiency. A post implementation power reading of each unit will be made.

Pre-FIM Measurements

1. Existing RTU Inventory
2. Existing RTU EERs

Post-FIM Measurements

1. Visual inspection of all RTUs in year 1 and verification of nameplate efficiencies (EER)
2. RTU compressor power and energy for a one week period in 10 second intervals.
3. RTU combustion efficiency for proposed unit.

Stipulated Parameters

Stipulated parameters were based on current equipment nameplates, drawings, and engineering estimates as defined in the table that follows.

Total Cooling Rating (Tons)	14.5
Average EER of RTUs Including degradation	8.00
Equivalent Full Load Operating Hours (hr/yr) from NYS Tech Manual	750
Heating Efficiency (%)	80%

Savings Calculation Method

Savings are achieved through an increase in RTU efficiency (EER). Each saving calculation is defined below:

Efficiency Improvement of RTUs

Cooling energy efficiency savings for the RTUs are calculated by increasing the cooling efficiency as compared to the existing RTUs. The baseline EER was estimated using the National Renewable Energy Laboratory's (NREL) formula for estimating the degradation of a RTU's EER. The current RTUs are 23 years old which results in an EER of 8.0.

The key parameter to be measured will be kW for each unique RTU. Savings will be determined by subtracting post-retrofit annual consumption, as calculated using the energy engineering model provided in Appendix B of the IGA. The RTU efficiency savings will be determined based on comparing the nameplate efficiency (EER) to the measured kW of the installed units.

The heating energy efficiency savings for the RTUs are calculated by increasing the heating efficiency as compared to the existing RTUs. The key parameter to be measured will be combustion efficiency. Savings will be determined by subtracting post-retrofit annual consumption, as calculated using the energy engineering model provided in Appendix B of the IGA.

The calculations utilized to determine EER and heating efficiency is provided below:

$$EER_{Measured} = \frac{Rated\ Btu\ of\ Cooling\ Tons}{Measured\ Watt\ hours}$$

Energy efficiency savings are calculated as follows:

$$Energy\ Efficiency\ \ Savings\ \left(\frac{kWh}{yr}\right) = Current\ RTU\ Usage - Post\ Implementation\ RTU\ Usage$$

$$Cost\ Savings\ =\ (kWh\ Savings\ *\ \frac{\$}{kWh}\ Rate)$$

$$Current\ RTU\ Usage = Cooling\ tons\ x\ 12{,}000\frac{Btu}{ton}x\ Cooling\ Full\ Load\ Hours \div EER_{Current} \div 1{,}000\ W/kW$$

$$Post\ Implementation\ RTU\ Usage = Cooling\ tons\ x\ 12{,}000\frac{Btu}{ton}x\ Cooling\ Full\ Load\ Hours \div EER_{Measured} \div 1{,}000\ W/kW$$

$$Annual\ NG\ Savings = Baseline\ NG\ Use - Proposed\ NG\ Use$$

$$Baseline\ NG\ Use = \frac{RTU\ Capacity\ x\ Operatng\ Hours\ x\ Part\ Load\ Factor}{Baseline\ Overall\ Efficiency\ x\ 100\ MBH/therm}$$

$$Proposed\ NG\ Use = \frac{RTU\ Capacity\ x\ Operatng\ Hours\ x\ Part\ Load\ Factor}{Proposed\ Overall\ Efficiency\ x\ 100\ MBH/therm}$$

FIM-5: DX Cooling System Upgrades

SmartWatt will replace the two (2) existing direct expansion AC units with new units manufactured by Carrier. New units will be high efficiency units. SmartWatt will replace the existing indoor AC coils for each corresponding outdoor unit

M&V Option

Option A was selected to provide a cost effective means to evaluate savings.

Overview of M&V Activities

M&V for this FIM will be performed during the even years throughout the length of the term. Savings are achieved through an increase in unit efficiency. A post implementation power reading of each unit will be made.

Pre-FIM Measurements

1. Existing DX Unit Inventory
2. Existing DX Unit EERs

Post-FIM Measurements

1. Visual inspection of all units in year 1 and verification of nameplate efficiencies (EER)
2. Annual equipment compressor power and energy for a one week period in 10 second intervals

Stipulated Parameters

Stipulated parameters were based on current equipment nameplates, drawings, and engineering estimates as defined in the table that follows.

Total Cooling Rating (Tons)	14.5
Average EER of DX Units Including degradation	7.00
Equivalent Full Load Operating Hours (hr/yr) from NYS Tech Manual	553

Savings Calculation Method

Savings are achieved through an increase in DX Unit efficiency (EER). The saving calculation is defined below:

Efficiency Improvement of DX Cooling Units

Cooling energy efficiency savings for the air conditioning units are calculated by increasing the cooling efficiency as compared to the existing RTUs. The baseline EER was estimated using the National Renewable Energy Laboratory's (NREL) formula for estimating the degradation of a DX Unit's EER. The current air conditioning units are 26 years old which results in an EER of 7. The key parameter to be measured will be kW for each unit. Savings will be determined by subtracting post-retrofit annual consumption, as calculated using the energy engineering model provided in Appendix B of the IGA. The air conditioning efficiency savings will be determined based on comparing the nameplate efficiency (EER) to the measured kW of the installed units.

The calculations utilized to determine EER and heating efficiency is provided below:

$$EER_{Measured} = \frac{Rated\ Btu\ of\ Cooling\ Tons}{Measured\ Watt\ hours}$$

Energy efficiency savings are calculated as follows:

$$Energy\ Efficiency\ \ Savings\ \left(\frac{kWh}{yr}\right) = Current\ AC\ Unit\ Usage - Post\ Implementation\ AC\ Unit\ Usage$$

$$Cost\ Savings\ =\ (kWh\ Savings\ *\ \frac{\$}{kWh}\ Rate)$$

$$Current\ AC\ Unit\ Usage = \ Cooling\ tons\ x\ 12{,}000\frac{Btu}{ton} x\ Cooling\ Full\ Load\ Hours \div EER_{Current} \div 1{,}000\ W/kW$$

$$Post\ Implementation\ AC\ Unit\ Usage = \ Cooling\ tons\ x\ 12{,}000\frac{Btu}{ton} x\ Cooling\ Full\ Load\ Hours \div EER_{Measured} \div 1{,}000\ W/kW$$

FIM-6: Replace Boiler at the Fire Station

SmartWatt will remove and replace the existing 175 MBH natural gas fired boiler with a new unit condensing boiler manufactured by Weil McLain.

M&V Option

Option A was selected to provide a cost effective means to evaluate savings.

Overview of M&V Activities

M&V for this FIM will be performed in Year 1 ONLY. No further annual M&V will be performed.

Pre-FIM Measurements

1. Annual natural gas consumption

Post-FIM Measurements

1. Combustion efficiency

Stipulated Parameters

Stipulated parameters were based on current equipment nameplates, drawings, and engineering estimates as defined in the table that follows for each building.

Current Boiler Combustion Efficiency	80.0%
Current Distribution Efficiency	9%
Current Boiler Fuel Usage	2,505 therm/yr

Savings Calculation Method

Energy savings are calculated by increasing boiler efficiency from an average of 80% to 94%. The calculations utilized to determine savings are provided below:

$$Annual\ NG\ Savings = Baseline\ NG\ Use - Post\ Installation\ NG\ Use$$

$$Baseline\ NG\ Use = \frac{Boiler\ Heating\ Load}{Current\ Combustion\ Efficiency\ x\ Current\ Distribution\ Efficiency}$$

$$Post\ Installation\ NG\ Use = \frac{Boiler\ Heating\ Load}{Post\ Installation\ Measured\ Combustion\ Efficiency\ x\ (Current\ Distribution\ Efficiency + 5\%)}$$

$$Annual\ \$\ Savings\ =\ Annual\ NG\ Savings\ \times\ \$/Therm\ Rate$$

5.4 M&V Plan Costs

Table 22 summarizes the annual M&V costs for each year of the project term. As described in the sections above SmartWatt will be making measurements on different measures throughout each year of the term.

Table 25: Annual M&V Costs

Annual Period	Annual M&V Cost
Year 1	$2,191
Year 2	$2,257
Year 3	$2,324
Year 4	$2,394
Year 5	$2,466
Year 6	$2,540
Year 7	$2,616
Year 8	$2,695
Year 9	$2,775
Year 10	$2,859

6.0 Summary

6.1 Financial Summary

The Village has opted to pursue an energy savings performance contract to fund the project resulting in a 10 year term. The energy savings project can be accomplished through a self-funding program requiring no up front capital investment. The Village of Cazenovia will complete improvements valued at $727,420. ***Table 26*** provides an overview of the project costs and savings.

Table 26: Cost and Savings Summary

Project Investment to SmartWatt	$417,684
National Grid "Buyback"	$312,138
Utility Incentive	$2,402
Total Project Investment to the Village of Cazenovia	$727,420
Year 1 Electric Savings	$16,904
Year 1 Natural Gas Savings	$549
Existing Annual Street Lighting "Facilities" Charges	$57,115
Proposed Annual Street Maintenance Cost	$2,600
Proposed Pole Attachment Fee	$1,346
Annual Equipment Replacement Savings	$7,355
Total Annual Savings	$63,267

6.2 Project Management and Schedule

Following completion of the IGA, it is anticipated that the Village will, under agreement with SmartWatt, opt to move forward to implementation. SmartWatt will then be contracted to implement the project including design and construction.

Geoff Frey, Project Manager, at SmartWatt will have the overall responsibility for managing and executing the construction phase of this project. The table below lists the major milestones for this project. The dates below are approximates. A detailed WBS will be provided as part of the Project Management Plan presented during the construction phase.

Table 27: Major Milestone Summary Table

Milestone	Date
Deliver IGA Report / Board Approval	7/5/17
Village Received "Buyback" Contract from National Grid	9/5/17
Board Meeting Approval of Contract	10/5/17
Village Submits Contract to Public Service Commission	10/7/17
Closing between Village and National Grid for Street Lighting	1/15/18
Project Kickoff	2/1/18
FIM – 1 Street Lighting Installation	4/4/18
FIM – 2 LED Lighting Upgrades	3/2/18
FIM – 3 Building Envelope Improvements	3/7/18
FIM – 4 RTU Replacements	4/24/18
FIM – 5 DX Cooling System Upgrades	5/15/18
FIM – 6 Boiler Improvements	6/1/18
Project Completion	7/3/18

Appendix A – Baseline Utility Data

Baseline Usage Summary by Building

Facility	Electric Usage (kWh/yr)	Natural Gas Usage (therm/yr)
Street Lighting	142,835	-
Village Hall	42,789	4,051
Fire Station	27,000	3,391
DPW Building	21,959	3,516
Total	**234,583**	**10,958**

Baseline Year Summary by Building

Street Lighting

Electric	
Month	**kWh**
Jan	15,208
Feb	12,605
Mar	12,400
Apr	10,447
May	9,420
Jun	8,426
Jul	9,043
Aug	10,310
Sep	11,441
Oct	13,461
Nov	14,421
Dec	15,654
Total	**142,835**

Maintenance Costs	
Month	**Costs**
Jan	4,760
Feb	4,760
Mar	4,760
Apr	4,760
May	4,760
Jun	4,760
Jul	4,760
Aug	4,760
Sep	4,760
Oct	4,760
Nov	4,760
Dec	4,760
Total	**$57,116**

Village Hall

Electric	
Month	kWh
Jan	3,998
Feb	4,810
Mar	3,827
Apr	3,506
May	2,688
Jun	2,991
Jul	4,110
Aug	4,397
Sep	3,485
Oct	2,565
Nov	2,793
Dec	3,619
Total	**42,789**

Natural Gas	
Month	Therms
Jan	834
Feb	795
Mar	590
Apr	556
May	212
Jun	40
Jul	21
Aug	15
Sep	17
Oct	61
Nov	316
Dec	594
Total	**4,051**

Fire Station

Electric	
Month	kWh
Jan	2,480
Feb	2,320
Mar	2,000
Apr	2,360
May	1,920
Jun	2,200
Jul	2,560
Aug	2,480
Sep	2,320
Oct	2,000
Nov	2,000
Dec	2,360
Total	**27,000**

Natural Gas	
Month	Therms
Jan	647
Feb	710
Mar	548
Apr	508
May	192
Jun	18
Jul	7
Aug	8
Sep	8
Oct	14
Nov	253
Dec	478
Total	**3,391**

DPW Garage

Electric	
Month	kWh
Jan	3,014
Feb	2,797
Mar	2,719
Apr	2,163
May	1,436
Jun	1,359
Jul	1,249
Aug	1,178
Sep	1,208
Oct	1,248
Nov	1,457
Dec	2,131
Total	**21,959**

Natural Gas	
Month	Therms
Jan	773
Feb	839
Mar	599
Apr	489
May	95
Jun	8
Jul	-
Aug	-
Sep	-
Oct	-
Nov	77
Dec	636
Total	**3,516**

Appendix B – FIM Calculations

Table of Contents

FIM #: 2
Title LED Lighting Upgrades
Project: Village of Cazenovia

smartwatt

			Pre-Install (Baseline)					Post-Install (Proposed)							Lighting	Energy Savings	
Action #	Map Location #	Location Description	# of Baseline Fixtures	Pre-Install Fixture Code	Pre Watts Per Fixture	Pre Hours of Annual Operation	Pre Kwh	Proposed # of Fixtures	Proposed Fixture Code	Proposed Ceiling / Wall Mounted Sensor (#1)	Proposed Control Savings %	Proposed Watts per Fixture	Proposed Hours of Annual Operation	Annual Proposed Kwh	Kwh Saved	KW Demand Saved	Kwh Saved
1	1	Pool Table & Lounge - 201	4	W4/4F28/E	96	307	118	4	Rebuild	-	0%	50	307	61	56	0.18	56
2	2	Chief's Office - 202	3	W4/4F28/E	96	307	88	3	Rebuild	-	0%	50	307	46	42	0.14	42
3	3	Generator Room - 206	2	VN4/1F28/E	26	307	16	2	Rebuild	-	0%	13	307	8	8	0.03	8
4	4	Mechanical Equipment Room - 205	2	VN4/1F28/E	26	307	16	2	Rebuild	-	0%	13	307	8	8	0.03	8
5	5	Storage Room - 203	2	VN4/1F28/E	26	307	16	2	Rebuild	-	0%	13	307	8	8	0.03	8
6	6	Walkway - 204	3	CPY/2PL13/M	31	307	29	3	Rebuild	-	0%	24	307	22	6	0.02	6
7	7	Engine Room 1 - 101	6	IH8/4F28/E	96	307	177	6	Rebuild	-	0%	50	307	92	85	0.28	85
8	8	Vestibule - 104	3	RC8/2PL13	31	307	29	3	Retro Kit Can to LED	-	0%	13	307	12	17	0.05	17
9	9	Dispatcher - 105	2	TF/2F28/E	48	307	29	2	Rebuild	-	0%	25	307	15	14	0.05	14
10	10	DayRoom - 103	4	TF/2F28/E	48	307	59	4	Rebuild	-	0%	25	307	31	28	0.09	28
11	11	Storage - 107	1	W4/4F28/E	96	307	29	1	Rebuild	-	0%	50	307	15	14	0.05	14
12	11	Storage - 107	2	VN4/1F28/E	26	307	16	2	Rebuild	-	0%	13	307	8	8	0.03	8
13	12	Shop - 108	2	VN4/1F28/E	26	307	16	2	Rebuild	-	0%	13	307	8	8	0.03	8
14	13	Airpac - 110	1	VN4/1F28/E	26	307	8	1	Rebuild	-	0%	13	307	4	4	0.01	4
15	14	Rescue and Cleanup - 111	1	VN4/1F28/E	26	307	8	1	Rebuild	-	0%	13	307	4	4	0.01	4
16	14	Rescue and Cleanup - 111	1	CPY/2PL13/M	31	307	10	1	New Wall Pack	-	0%	13	307	4	6	0.02	6
17	15	RR - 112	1	VN2/2F17/E	33	307	10	1	Rebuild	-	0%	21	307	6	4	0.01	4
18	16	RR - 113	1	VN2/2F17/E	33	307	10	1	Rebuild	-	0%	21	307	6	4	0.01	4
19	17	Kitchen - 114	5	W4/4F28/E	96	307	147	5	Rebuild	-	0%	50	307	77	71	0.23	71
20	18	Storage - 117	2	VN4/1F28/E	26	307	16	2	Rebuild	-	0%	13	307	8	8	0.03	8
21	19	Training Room - 116	12	TF/2F28/E	48	307	177	12	Rebuild	-	0%	25	307	92	85	0.28	85
22	20	Storage - 118	1	VN4/1F28/E	26	307	8	1	Rebuild	-	0%	13	307	4	4	0.01	4
23	21	Hall Near Storage	1	CPY/2PL13/M	31	307	10	1	New Wall Pack	-	0%	6	307	2	8	0.03	8
24	22	Engine Room No. 2	15	IH8/4F28/E	96	307	442	15	Rebuild	-	0%	50	307	230	212	0.69	212
25	22	Engine Room No. 2	3	CPY/2PL13/M	31	307	29	3	New Wall Pack	-	0%	13	307	12	17	0.05	17
26	0	Big Garage	24	S8/2F28/E	48	1,976	2,276	24	Rebuild	-	0%	25	1,976	1,186	1,091	0.55	1,091
27	0	Big Garage	6	S4/1F28/E	26	1,976	308	6	Rebuild	-	0%	25	1,976	296	12	0.01	12
28	0	Over Bench	1	S4/2F34/ESM	72	1,976	142	1	Rebuild	-	0%	25	1,976	49	93	0.05	93
29	0	Small Garage	12	S8/2F28/E	48	1,976	1,138	12	Rebuild	-	0%	25	1,976	593	545	0.28	545
30	0	Small Garage	2	S4/2F28/E	48	1,976	190	2	Rebuild	-	0%	25	1,976	99	91	0.05	91

FIM #: 2
Title LED Lighting Upgrades
Project: Village of Cazenovia

smartwatt

			Pre-Install (Baseline)					Post-Install (Proposed)							Lighting	Energy Savings	
Action #	Map Location #	Location Description	# of Baseline Fixtures	Pre-Install Fixture Code	Pre Watts Per Fixture	Pre Hours of Annual Operation	Pre Kwh	Proposed # of Fixtures	Proposed Fixture Code	Proposed Ceiling / Wall Mounted Sensor (#1)	Proposed Control Savings %	Proposed Watts per Fixture	Proposed Hours of Annual Operation	Annual Proposed Kwh	Kwh Saved	KW Demand Saved	Kwh Saved
31	0	Small Garage	2	S4/1F28/E	26	1,976	103	2	Rebuild	-	0%	25	1,976	99	4	0.00	4
32	0	Storage	1	I/50	50	1,976	99	1	Relamp	-	0%	10	1,976	20	79	0.04	79
33	0	Parts	4	S4/2F28/E	48	1,976	379	4	Rebuild	-	0%	25	1,976	198	182	0.09	182
34	0	Bath	1	I/60	60	1,976	119	1	Relamp	-	0%	10	1,976	20	99	0.05	99
35	0	Office	3	S4/2F28/E	48	1,581	228	3	Rebuild	-	0%	25	1,581	119	109	0.07	109
36	0	Breakroom	1	S8/2F28/E	48	1,976	95	1	Rebuild	-	0%	25	1,976	49	45	0.02	45
37	0	Back Garage	6	I/150	150	1,976	1,778	6	Relamp	-	0%	10	1,976	119	1,660	0.84	1,660
38	0	Flood	1	HPS/400	465	4,380	2,037	1	New Flood	-	0%	133	4,380	583	1,454	0.33	1,454
39	0	WALL PACK	1	HPS/70	95	4,380	416	1	New Wall Pack	-	0%	25	4,380	110	307	0.07	307
40	0	WALL PACK	1	MH/250	295	4,380	1,292	1	New Wall Pack	-	0%	25	4,380	110	1,183	0.27	1,183
41	0	Ice Rink	2	MH/400	458	183	167	2	New Flood	-	0%	133	183	49	119	0.65	119
42	0	Ice Rink	12	MH/400	458	183	1,003	12	New Flood	-	0%	133	183	291	712	3.90	712
43	0	Inside Building	8	I/60	60	1,976	948	8	Relamp	-	0%	10	1,976	158	790	0.40	790
44	0	B-03	1	W4/2F28/E	48	1,038	50	1	Rebuild	-	0%	25	1,038	26	24	0.02	24
45	0	B-03	2	S4/2F34/M	80	183	29	2	Rebuild	-	0%	25	183	9	20	0.11	20
46	0	B-04	2	S4/2F28/E	48	1,038	100	2	Rebuild	-	0%	25	1,038	52	48	0.05	48
47	0	B-05	2	S4/2F34/ESM	72	1,038	149	2	Rebuild	-	0%	25	1,038	52	98	0.09	98
48	0	B-10?	3	S4/2F28/E	48	1,038	149	3	Rebuild	-	0%	25	1,038	78	72	0.07	72
49	0	B-10?	1	W4/4F28/E	96	1,038	100	1	Rebuild	Wall Switch Sensor	0%	50	1,038	52	48	0.05	48
50	0	B-10?	2	W4/4F28/E	96	1,038	199	2	Rebuild	-	0%	50	1,038	104	95	0.09	95
51	0	B-08?	2	W4/2F28/E	48	1,038	100	2	Rebuild	-	0%	25	1,038	52	48	0.05	48
52	0	B-10?	1	S2/2F20/M	56	1,038	58	1	Rebuild	-	0%	21	1,038	22	36	0.04	36
53	0	B-10?	1	S4/2F28/E	48	1,038	50	1	Rebuild	-	0%	25	1,038	26	24	0.02	24
54	0	B-00	3	S4/2F34/E	60	183	33	3	Rebuild	-	0%	25	183	14	19	0.11	19
55	0	Light Logger 1 Area	4	S4/2F28/E	48	1,038	199	4	Rebuild	-	0%	25	1,038	104	95	0.09	95
56	0	B-07?	3	S4/2F34/E	60	183	33	3	Rebuild	-	0%	25	183	14	19	0.11	19
57	0	119	1	W4/2F28/E	48	1,038	50	1	Rebuild	-	0%	25	1,038	26	24	0.02	24
58	0	119	1	RC8/2PL13	31	1,038	32	1	Retro Kit Can to LED	-	0%	13	1,038	13	19	0.02	19
59	0	118	5	TF/2F28/E	48	1,038	249	5	Rebuild	-	0%	25	1,038	130	119	0.12	119
60	0	118	3	RC8/2PL13	31	1,038	97	3	Retro Kit Can to LED	-	0%	13	1,038	40	56	0.05	56

FIM #: 2
Title LED Lighting Upgrades
Project: Village of Cazenovia

smartwatt

			Pre-Install (Baseline)					Post-Install (Proposed)							Lighting	Energy Savings	
Action #	Map Location #	Location Description	# of Baseline Fixtures	Pre-Install Fixture Code	Pre Watts Per Fixture	Pre Hours of Annual Operation	Pre Kwh	Proposed # of Fixtures	Proposed Fixture Code	Proposed Ceiling / Wall Mounted Sensor (#1)	Proposed Control Savings %	Proposed Watts per Fixture	Proposed Hours of Annual Operation	Annual Proposed Kwh	Kwh Saved	KW Demand Saved	Kwh Saved
61	0	118	1	TF/2F28/E	48	1,038	50	1	Rebuild	-	0%	25	1,038	26	24	0.02	24
62	0	117	1	O4/2F28/E	48	1,038	50	1	Rebuild	-	0%	25	1,038	26	24	0.02	24
63	0	112	2	TF/2F28/E	48	1,038	100	2	Rebuild	-	0%	25	1,038	52	48	0.05	48
64	0	111	1	CF/15TWIST	15	183	3	1	Relamp	-	0%	10	183	2	1	0.01	1
65	0	113	4	RC8/2PL13	31	1,038	129	4	Retro Kit Can to LED	-	0%	13	1,038	54	75	0.07	75
66	0	101	2	CF/27TWIST	27	1,038	56	2	Relamp	-	0%	10	1,038	21	35	0.03	35
67	0	115 - inaccessible	1	-	0	1,038	0	1	No Action	-	0%	0	1,038	0	0	0.00	0
68	0	114 - inaccessible	1	-	0	1,038	0	1	No Action	-	0%	0	1,038	0	0	0.00	0
69	0	110	2	RC8/2PL13	31	1,038	64	2	Retro Kit Can to LED	-	0%	13	1,038	27	37	0.04	37
70	0	Right of 110	4	TF/2F28/E	48	1,038	199	4	Rebuild	-	0%	25	1,038	104	95	0.09	95
71	0	107	4	TF/2F28/E	48	1,038	199	4	Rebuild	-	0%	25	1,038	104	95	0.09	95
72	0	108	2	TF/2F28/E	48	1,038	100	2	Rebuild	-	0%	25	1,038	52	48	0.05	48
73	0	106	2	CF/23TWIST	23	1,038	48	2	Relamp	-	0%	10	1,038	21	27	0.03	27
74	0	BELOW 106	1	TF/2F28/E	48	1,038	50	1	Rebuild	-	0%	25	1,038	26	24	0.02	24
75	0	RIGHT OF 106	2	TF/2F28/E	48	1,038	100	2	Rebuild	-	0%	25	1,038	52	48	0.05	48
76	0	109	2	TF/2F28/E	48	1,038	100	2	Rebuild	-	0%	25	1,038	52	48	0.05	48
77	0	104	4	TF/2F28/E	48	1,038	199	4	Rebuild	-	0%	25	1,038	104	95	0.09	95
78	0	125	2	TF/2F28/E	48	1,038	100	2	Rebuild	-	0%	25	1,038	52	48	0.05	48
79	0	125	19	RC8/2PL13	31	1,038	611	19	Retro Kit Can to LED	-	0%	13	1,038	256	355	0.34	355
80	0	Above 123	1	W4/2F28/E	48	1,038	50	1	Rebuild	-	0%	25	1,038	26	24	0.02	24
81	0	123	2	TF/2F28/E	48	1,038	100	2	Rebuild	-	0%	25	1,038	52	48	0.05	48
82	0	124	2	TF/2F28/E	48	1,038	100	2	Rebuild	-	0%	25	1,038	52	48	0.05	48
83	0	203	3	I/150	150	1,038	467	3	Relamp	-	0%	10	1,038	31	436	0.42	436
84	0	202	8	CF/27TWIST	27	1,038	224	8	Relamp	-	0%	10	1,038	83	141	0.14	141
85	0	201	2	CF/27TWIST	27	1,038	56	2	Relamp	-	0%	10	1,038	21	35	0.03	35
86	0	201	3	CF/27TWIST	27	1,038	84	3	Relamp	-	0%	10	1,038	31	53	0.05	53
87	0	205	2	W4/2F28/E	48	1,038	100	2	Rebuild	-	0%	25	1,038	52	48	0.05	48
88	0	206	4	W4/2F28/E	48	1,038	199	4	Rebuild	-	0%	25	1,038	104	95	0.09	95
89	0	204	6	W4/1F28/E	26	183	28	6	Rebuild	-	0%	13	183	14	15	0.08	15
90	0	Lantern	2	HPS/150	188	4,380	1,647	2	Retrofit Lantern	-	0%	40	4,380	350	1,296	0.30	1,296

FIM #: 2
Title LED Lighting Upgrades
Project: Village of Cazenovia

smartwatt

			Pre-Install (Baseline)					Post-Install (Proposed)							Lighting	Energy Savings	
Action #	Map Location #	Location Description	# of Baseline Fixtures	Pre-Install Fixture Code	Pre Watts Per Fixture	Pre Hours of Annual Operation	Pre Kwh	Proposed # of Fixtures	Proposed Fixture Code	Proposed Ceiling / Wall Mounted Sensor (#1)	Proposed Control Savings %	Proposed Watts per Fixture	Proposed Hours of Annual Operation	Annual Proposed Kwh	Kwh Saved	KW Demand Saved	Kwh Saved
91	0	HPS WP	1	HPS/100	138	4,380	604	1	New Wall Pack	-	0%	25	4,380	110	495	0.11	495
92	0	CFL	1	CF/18TWIST	18	4,380	79	1	No Action	-	0%	18	4,380	79	0	0.00	0
			299				**21,802**	**299**						**7,774**	**14,029**	**14**	**14,029**

FIM #: 3
Title Building Envelope Upgrades
Project: Village of Cazenovia

smartwatt

Description Seal cracks and gaps in the building envelope to reduce infiltration.

Savings Summary						
Building	Gas Savings (Therms)	Gas $ Savings	Electric Savings	Electric $ Savings	Baseline Electric Utility Rate Used ($/kWh)	Baseline Gas Utility Rate Used ($/Therm)
Village Hall	248	$ 147	543	$ 55	$ 0.102	$ 0.594
Firehouse	242	$ 160	597	$ 85	$ 0.143	$ 0.659
DPW Garage	260	$ 159			$ 0.141	$ 0.610
Total	750	$ 465	1,139	$ 141	$ 0.123	$ 0.621

Given:

Building	Heating Unit Cost ($/therm)	Heating Fuel	Electric Cost ($/kWh)
Village Hall	$ 0.594	Natural Gas	$ 0.102
Firehouse	$ 0.659	Natural Gas	$ 0.143
DPW Garage	$ 0.610	Natural Gas	$ 0.141

ENERGY CONVERSIONS & CONSTANTS

1 therm =	100,000	Btu
Fuel		**Units**
Natural Gas	1	therm/ccf
Oil	1.38	therm/gallon

Assumptions:

Building	% Infiltration / Exfiltration	Local Shielding Class	Number of Stories	Average Wind Speed (mph)	Heating Efficiency	Cooling Efficiency (kW/ton)
Village Hall	50%	3	2	8.73	80%	1.00
Firehouse	50%	3	2	8.73	94%	1.00
DPW Garage	50%	3	1	8.73	81%	

Building	Occupied Space Heating Setpoint	Unnoccupied Space Heating Setpoint	Average OA Temp During Heating Season Occupied Hours	Average OA Temp During Heating Season Unoccupied Hours	Heating Season Occupied Hours	Heating Season Unoccupied Hours
Village Hall	70	65	32.3	37.6	1085	4130
Firehouse	70	65	32.3	37.6	925	4290
DPW Garage	64	60	32.3	37.6	925	4290

Building	Occupied Space Cooling Setpoint	Unnoccupied Space Cooling Setpoint	Cooling System Supply Air Enthalpy (Btu/lbm)	Average OA Temp During Cooling Season Occupied Hours	Average Outside Air Enthalpy During Occupied Hours (Btu/lbm)	Average OA Temp During Cooling Season Unoccupied Hours	Average Outside Air Enthalpy During Unoccupied Hours (Btu/lbm)	Cooling Season Occupied Hours	Cooling Season Unoccupied Hours
Village Hall	74	78	22.4	74.0	31.7	73.4	30	950	1146
Firehouse	74	74	22.4	74.0	31.7	73.4	30	720	1376
DPW Garage									

FIM #: 3
Title Building Envelope Upgrades
Project: Village of Cazenovia

smartwatt

Crack Estimate Summary:

Building	Existing Crack Area Sq.Ft
Village Hall	1.3
Firehouse	1.5
DPW Garage	2.3
Total	5.2

Village Hall

Work to be completed	No. of Units	Average Perimeter (ft)	Total Perimeter (ft)	Crackage (in)	Conversion to feet		Product	
Exit Doors	5	20	100	1/16	1/12	=	0.52	
Windows	17	309	5253	1/32	1/12	=	0.80	
						Total =	1.33	ft^2

Firehouse

Work to be completed	No. of Units	Average Perimeter (ft)	Total Perimeter (ft)	Crackage (in)	Conversion to feet		Product	
Exit Doors	7	20		1/32	1/12	=	0.36	
Garage Doors	6	318		1/32	1/12	=	0.83	
Windows	8	122		1/32	1/12	=	0.32	
Attic Hatch	1	7		1/16	1/12	=	0.04	
						Total =	1.55	ft^2

DPW Garage

Work to be completed	No. of Units	Average Perimeter (ft)	Total Perimeter (ft)	Crackage (in)	Conversion to feet		Product	
Exit Doors	3	20		1/16	1/12	=	0.31	
Garage Doors	5	260		1/32	1/12	=	0.68	
Roof/ Wall Joint	1	340		1/32	1/12	=	0.89	
Block Wall Crack	1	20		1/4	1/12	=	0.42	
						Total =	2.29	ft^2

Calculation:

Leakage Rate (CFM) = Crack Area (ft^2) x 144 (in^2/ft^2) x Infiltration to Exfiltration Ratio x SQRT ((Stack Coefficient x ABS(Temperature Setpoint - Outside Air Temperature)) + (Wind Coefficient x Avg Wind Velocity^2))
Heating Energy Savings (therms) = 1.08 x Leakage Rate x (Heating Setpoint - Outside Air Temperature) x Hours per Year / (100,000 Btu/therm) / Heating System Efficiency
Cooling Energy Savings (kWh) = 4.5 x Leakage Rate x (Outside Air Enthalpy - Cooling Air Enthalpy) x Hours per Year x Cooling Efficiency (kW/ton) / (12,000 Btu/ton)

Building	Stack Coefficient A	Wind Coefficient B	Occupied Heating Savings (Therms)	Unoccupied Heating Savings (Therms)	Occupied Cooling Savings (kWh)	Unoccupied Cooling Savings (kWh)	Total Heating Savings (therms)	Total Cooling Savings (kWh)	Annual Cost Savings (Heating)	Annual Cost Savings (Cooling)	Total Annual Cost Savings
Village Hall	0.0299	0.0086	70	177	257	286	248	543	$ 147	$ 55	$ 202
Firehouse	0.0299	0.0086	60	183	227	370	242	597	$ 160	$ 85	$ 245
DPW Garage	0.015	0.0065	64	196	-	-	260	-	$ 159	$ -	$ 159
						Totals	**750**	**1,139**	**$ 465**	**$ 141**	**$ 606**

FIM #: 3
Title Building Envelope Upgrades
Project: Village of Cazenovia

STACK COEFFICIENT	
# of Stories	Coeff A
1	0.015
2	0.0299
3	0.0449
4	0.062833333
5	0.078583333
6	0.094333333
7	0.110083333
8	0.125833333
9	0.141583333
10	0.157333333

	WIND COEFFICIENT				
	Shielding Class				
# of Stories	1	2	3	4	5
1	0.0119	0.0092	0.0065	0.0039	0.0012
2	0.0157	0.0121	0.0086	0.0051	0.0016
3	0.0184	0.0143	0.0101	0.006	0.0018
4	0.021833333	0.016966667	0.012	0.0071	0.002133333
5	0.025083333	0.019516667	0.0138	0.00815	0.002433333
6	0.028333333	0.022066667	0.0156	0.0092	0.002733333
7	0.031583333	0.024616667	0.0174	0.01025	0.003033333
8	0.034833333	0.027166667	0.0192	0.0113	0.003333333
9	0.038083333	0.029716667	0.021	0.01235	0.003633333
10	0.041333333	0.032266667	0.0228	0.0134	0.003933333

LOCAL SHIELDING CLASSES	
CLASS	DESCRIPTION
1	No obstructions or local shielding
2	Light Local shielding; few obstructions, few trees, or small shed
3	Moderate local shielding, some obstructions within two house heights, thick hedge, solid fence, or one neighboring house
4	Heavy shielding; obstuctions around most of perimeter, buildings or trees within 30 ft in most directions; typical suburban shielding.
5	Very heavy shielding; large obstructins surrounding perimeter within tow house heights; typical downtown shielding

FIM #: 4
Title RTU Replacements
Project: Village of Cazenovia

Savings Summary		
18	Gas Savings	Therm/yr
$11	Gas $ Savings	$/yr
5,568	Electric Savings	kWh/yr
$566	Electric $ Savings	$/yr

Baseline Utility Rates Used	
Electric ($/kWh)	Gas ($/Therm)
$0.10	$0.59

Facility: Village Hall - RTU Replacement

Inputs

A	15	*Tons*	Cooling Tonnage to be Replaced
B	194,000	*Btu/h*	Capacity of Existing Gas Furnace
C	768	*hrs/yr*	Cooling Equivalent Full Load Operating Hours (Taken from NYS Tech Manual)
D	750	*hrs/yr*	Heating Equivalent Full Load Operating Hours
E	4	*mo/Yr*	Number of Cooling Months
F	8.00	*Btuh/Watt (EER)*	Performance of Existing Unit (estimate of units)
G	12.0	*Btuh/Watt (EER)*	Performance of Replacement Unit
H	80%	*%*	Heating Efficiency - Existing Unit
I	81%	*%*	Heating Efficiency - Replacement Unit
J	$ 0.10	*/kWh*	Electrical Energy Rate - Summer
K		*/kW-mo*	Electrical Energy Rate - Summer
L	$ 0.59	*/Therm*	Natural Gas Rate
M			Installed Cost of Replacement Unit

Results

N	7.3	*kW*	A.C. kW Reduction
O	5,568	*kWh/yr*	A.C. Annual Energy Savings
P	29	*kW-mo/yr*	A.C. Annual KW Savings
Q	$566	*/yr*	Annual Electrical Cost Savings
R	2,395	*Btu/h*	Heating Consumption Red.
S	18	*Therm/yr*	Annual Heating Savings
T	$11	*/yr*	Annual Heating Cost Savings

FIM #: 5
Title DX Cooling System Upgrades
Project: Village of Cazenovia

smartwatt

Savings Summary		
3,454	Electric Savings	kWh/yr
$494	Electric $ Savings	$/yr
13%	% Savings	%

Baseline Utility Rates Used
Electric ($/kWh)
$0.1432

Facility: Firehouse - DX Replacement

Inputs

A	8.74	*Tons*	Cooling Tonnage to be Replaced
B		*Btu/h*	Capacity of Existing Gas Furnace
C	553	*hrs/yr*	Cooling Equivalent Full Load Operating Hours (Taken from NYS Tech Manual)
D		*hrs/yr*	Heating Equivalent Full Load Operating Hours
E	4	*mo/Yr*	Number of Cooling Months
F	7.00	*Btuh/Watt (EER)*	Performance of Existing Unit (estimate of units)
G	12.0	*Btuh/Watt (EER)*	Performance of Replacement Unit
H		*%*	Heating Efficiency - Existing Unit
I		*%*	Heating Efficiency - Replacement Unit
J	$ 0.14	*/kWh*	Electrical Energy Rate - Summer
K		*/kW-mo*	Electrical Energy Rate - Summer
L	$ 0.60	*/Therm*	Natural Gas Rate
M			Installed Cost of Replacement Unit

Results

N	6.2	*kW*	A.C. kW Reduction
O	3,454	*kWh/yr*	A.C. Annual Energy Savings
P	25	*kW-mo/yr*	A.C. Annual KW Savings
Q	$494	*/yr*	Annual Electrical Cost Savings
R	N/A	*Btu/h*	Heating Consumption Red.
S	N/A	*Therm/yr*	Annual Heating Savings
T		*/yr*	Annual Heating Cost Savings

FIM #: 6
Title Boiler Upgrades
Project: Village of Cazenovia

smartwatt

Savings Summary		
373	Gas Savings	Therm/yr
$246	Gas $ Savings	$/yr

Baseline Utility Rates Used
Gas ($/Therm)
$0.6589

Description: Replace the 175 MBH Boiler with a Weil Mclain EVG 220 Boiler
The existing boilers have a combustion efficiency of 80%. The new boilers have a combustion efficiency of about 94%.

GIVEN:

Fuel Energy Cost	=	$0.659	4	Units from Chart
Boiler Plant Capacity	=	175		Mbh
Operation (Hours/Year)	=	1085		Hours/Year
Annual Heating Plant Energy Cost	=	$ 2,028		

ASSUMPTION:

Existing Efficiency (Combustion)	=	80%
Existing Efficiency (Dist./Losses)	=	9%
New Efficiency (Combustion)	=	94%
New Efficiency (Dist./Losses)	=	9%
Part Load Factor	=	10%

Units Chart			
$/MCF (Nat'l Gas)	1	1,030,000	btu/MCF
$/CCF (Nat'l Gas)	2	103,000	btu/CCF
$/CF (Nat'l Gas)	3	1,030	btu/CF
$/Therm (Nat'l Gas)	4	100,000	btu/Therm
$/gal (LP Gas)	5	91,500	btu/gallon
$/gal (Fuel Oil #2)	6	139,000	btu/gallon
$/lb Steam	7	975	btu/lb Steam
$/1000 lbs Steam	8	975,000	btu/1000 lbs Steam

FORMULA:

Energy Usage = (Capacity(Mbh)) x (Hours of Operation/Year) x (Part Load Factor) / (Combustion Efficiency x Distribution Efficiency)
Fuel Use (Unit) = (Usage (Mbh)) / (Heating Value of Fuel)
Fuel Energy Cost ($) = ((Fuel Use(Unit) x Fuel Cost($/Unit))

CALCULATION:

	Capacity	Hours/Year	Part Load Factor	Efficiency (Comb.)	Efficiency (Dist.)	
Existing Energy Usage = (	175)x(	1085)x(	10%)/((	80%)x(	9%)) =	250,530 Mbh
New Energy Usage = (	175)x(	1085)x(	10%)/((	94%)x(	9%)) =	213,217 Mbh

	Usage (Mbh)	Conversion(Mbh/Therm)	
Existing Fuel Usage = (	250,530)/(	100) =	2,505 Therm
New Fuel Usage = (	213,217)/(	100) =	2,132 Therm

	Therm	$/fuel unit	
Existing Fuel Cost = (	2,505)*(	$0.659) =	$ 1,651
Existing Fuel Cost = (	2,132)*(	$0.659) =	$ 1,405

Result

Existing Annual Use =	**2,505**	**Therm**	**$**	**1,651**
Proposed Annual Use =	**2,132**	**Therm**	**$**	**1,405**

81% of utility bill

Annual Savings =	**373**	**Therm**	**$**	**246**
Savings as Percent of Existing	**=**			**15%**

Appendix C – Equipment Cut Sheets

Table of Contents

Consistent with LEED® goals & Green Globes™ criteria for light pollution reduction

Autobahn Series ATBS

Roadway & Security Lighting

PRODUCT OVERVIEW

Applications:

Residential streets
Parking lots
General security lighting

DIMENSIONS

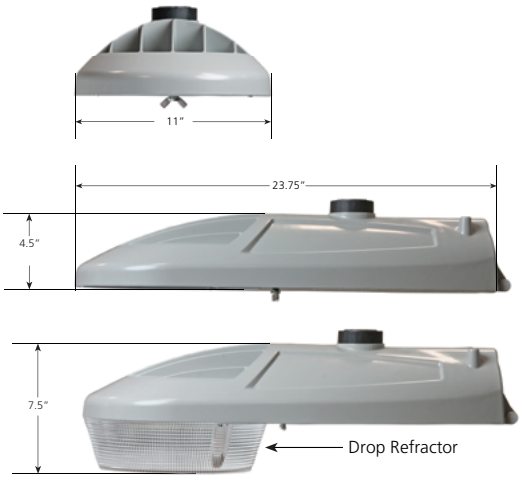

Effective Projected Area (EPA) The EPA for the ATBS is 0.3 sq. ft., Approx. Wt. = 12 lbs. (5 kg)

Features:

OPTICAL

Same Light: Performance is comparable to 50W – 150W HPS and up to 175W Mercury Vapor roadway and security lighting luminaires.

White Light: Correlated color temperature - 4000K, 70 CRI minimum, 3000K, 70 CRI minimum or optional 5000K, 70 CRI minimum.

IP66 rated borosilicate glass optics ensure longevity and minimize dirt depreciation. Unique IP66 rated LED light engines provide 0% uplight and restrict backlight to within sidewalk depth, providing optimal application coverage and optimal pole spacing.

Available distributions are Type II, III, and V roadway distributions. When used with the optional acrylic refractor the unit provides approximately 10% uplight and increased vertical foot-candles

ELECTRICAL

Expected Life: LED light engines are rated >100,000 hours at 25°C, L70. Electronic driver has an expected life of 100,000 hours at a 25°C ambient.

Lower Energy: Saves an expected 40-60% over comparable HID luminaires.

Robust Surge Protection: Three different surge protection options provide a minimum of IEEE/ANSI C62.41 Category C (10kV/5kA) protection.

MECHANICAL

Includes standard AEL lineman-friendly features such as tool-less entry, 3 station terminal block and quick disconnects. Bubble level located inside the electrical compartment for easy leveling at installation.

Rugged die-cast aluminum housing and door are polyester powder-coated for durability and corrosion resistance. Rigorous five-stage pre-treating and painting process yields a finish that achieves a scribe creepage rating of 8 (per ASTM D1654) after over 5000 hours exposure to salt fog chamber (operated per ASTM B117).

Mast arm mount is adjustable for arms from 1-1/4" to 2" (1-5/8" to 2-3/8" O.D.) diameter. The 2 – bolt clamping mechanism provides 3G vibration rating per ANSI C136.

The Wildlife shield is cast into the housing (not a separate piece).

CONTROLS

NEMA 3 pin photocontrol receptacle is standard, with the Acuity designed ANSI standard 5 pin and 7 pin receptacles optionally available.

Premium solid state locking-style photocontrol – PCSS (10 year rated life)
Extreme long life solid state locking-style photocontrol – PCL1 (20 year rated life)

Optional onboard Adjustable Output module allows the light output and input wattage to be modified to meet site specific requirements, and also can allow a single fixture to be flexibly applied in many different applications.

STANDARDS

Rated for -40°C to 40°C ambient
CSA Certified to U.S. and Canadian standards
Complies with ANSI: C136.2, C136.10, C136.14, C136.31, C136.15, C136.37

Note: Specifications subject to change without notice. Actual performance may differ as a result of end-user environment and application.

American Electric Lighting®

ORDERING INFORMATION

Example: ATBS A MVOLT R2

Series

ATBS Autobahn LED Roadway & Security

Performance Packages

A 2,500 lumens
B 3,200 lumens
C 3,800 lumens
E 4,700 lumens
F 5,400 lumens
G 6,100 lumens
H 7,100 lumens
I 8,500 lumens

Voltage

MVOLT Multi-volt, 120-277V

Optics

R2 Roadway Type II
R3 Roadway Type III
R5 Roadway Type V
D2 Type II, Drop Refractor included
D3 Type III, Drop Refractor included
D5 Type V, Drop Refractor included

Options

Color Temperature (CCT)
(Blank) 4000K CCT, 70 CRI Min.
3K 3000K CCT, 70 CRI Min.
5K 5000K CCT, 70 CRI Min.

Paint
Blank Gray (Standard)
BK Black
WH White
BZ Bronze

Surge Protection
Standard 10kV/5kA SPD
Blank Acuity SPD-10kV/5kA with inductive filter (Standard)
MP MOV Pack
IL SPD with Indicator Light

Misc.
HSS House Side Shield
NL NEMA Label
XL Not CSA Certified

Controls
(Blank) 3 Pin NEMA Photocontrol Receptacle
NR[1] No Photocontrol Receptacle
DM[2] 0V-10V Dimmable Driver
P5 5 Pin Photocontrol Receptacle (dimmable driver included)
P7 7 Pin Photocontrol Receptacle (dimmable driver included)
PCSS[1] DTL DSS Photocontrol
PCL1[1] DTL DLL Photocontrol 120-277V
AO Field Adjustable Output
SH Shorting Cap

Install Packages
PKGS DTL DSS Photocontrol
PKGL DTL DLL Photocontrol
Packages ship with selected photocontrol, 24", 1 1/4" diameter arm, 5' of prewire and mounting hardware

Accessories
ATBSREF Drop Refractor for field installation
ATBSHSS House Side Shield for field installation
ATBSLTS Light Trespass Shield for field installation

Notes
1. Not available with Install Packages.
2. Not available with AO option.

American Electric Lighting®
AEL Headquarters, 3825 Columbus Road, Granville, OH 43023
www.americanelectriclighting.com

Warranty Five-year limited warranty. Complete warranty terms located at: www.acuitybrands.com/CustomerResources/Terms_and_conditions.aspx
Actual performance may differ as a result of end-user environment and application. All values are design or typical values, measured under laboratory conditions at 25 °C. Specifications subject to change without notice.

Please contact your sales representative for the latest product information.

PERFORMANCE PACKAGE

Performance Package	Distribution	Lumens	Input Watts	LPW	50K Hours	LLD @ 25°C 75K Hours	100K Hours
A	R2	2,514	19	132	0.93	0.89	0.85
	R3	2,515		132			
	R5	2,649		139			
	D2	2,394		126			
	D3	2,372		125			
	D5	2,521		133			
B	R2	3,166	24	132	0.93	0.89	0.85
	R3	3,167		132			
	R5	3,336		139			
	D2	3,015		126			
	D3	2,988		124			
	D5	3,175		132			
C	R2	3,784	31	122	0.93	0.89	0.85
	R3	3,780		122			
	R5	4,029		130			
	D2	3,604		116			
	D3	3,566		115			
	D5	3,835		124			
E	R2	4,770	40	119	0.93	0.89	0.85
	R3	4,704		118			
	R5	4,867		122			
	D2	4,543		114			
	D3	4,438		111			
	D5	4,650		116			
F	R2	5,392	47	115	0.93	0.89	0.85
	R3	5,407		115			
	R5	5,175		110			
	D2	5,135		109			
	D3	5,101		109			
	D5	5,051		107			
G	R2	6,235	50	125	0.94	0.92	0.90
	R3	6,101		122			
	R5	6,404		128			
	D2	5,938		119			
	D3	5,756		115			
	D5	6,193		124			
H	R2	7194	60	120	0.94	0.92	0.90
	R3	7,141		119			
	R5	7,508		125			
	D2	6,851		114			
	D3	6,737		112			
	D5	7,150		119			
I	R2	8,653	76	114	0.94	0.92	0.90
	R3	8,525		112			
	R5	9,003		118			
	D2	8,241		108			
	D3	8,042		106			
	D5	8,574		113			

Note: Information shown above is based on 4000K nominal system data. Individual fixture performance may vary. Specifications subject to change without notice.

Warranty Five-year limited warranty. Complete warranty terms located at:
www.acuitybrands.com/CustomerResources/Terms_and_conditions.aspx
Actual performance may differ as a result of end-user environment and application.
All values are design or typical values, measured under laboratory conditions at 25 °C.
Specifications subject to change without notice.

Please contact your sales representative for the latest product information.

FIELD ADJUSTABLE OUTPUT MODULE

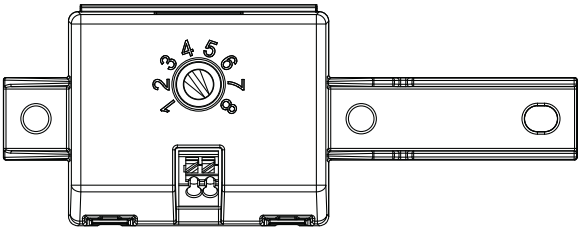

Field Adjustable Module

The Field Adjustable Output (FAO) module is an onboard device that adjusts the light output and input wattage to meet site specific requirements, allowing a single fixture configuration to be flexibly applied in many different applications.

Configuration	FAO Position	% Lumen	% Wattage
A	8	100	100
A	7	97	100
A	6	89	93
A	5	80	79
A	4	71	69
A	3	61	56
A	2	49	45
A	1	37	35
B	8	100	100
B	7	97	100
B	6	90	94
B	5	81	80
B	4	72	69
B	3	62	55
B	2	50	44
B	1	38	34
E	8	100	100
E	7	100	100
E	6	100	100
E	5	89	86
E	4	78	72
E	3	66	60
E	2	54	49
E	1	41	37
F	8	100	100
F	7	100	100
F	6	100	100
F	5	90	85
F	4	78	71
F	3	67	58
F	2	55	47
F	1	42	36

Configuration	FAO Position	% Lumen	% Wattage
G	8	100	100
G	7	100	100
G	6	100	100
G	5	90	86
G	4	78	72
G	3	67	59
G	2	55	48
G	1	42	36
H	8	100	100
H	7	100	100
H	6	100	100
H	5	89	87
H	4	78	74
H	3	65	62
H	2	53	51
H	1	40	39
I	8	100	100
I	7	100	100
I	6	100	100
I	5	90	86
I	4	79	73
I	3	67	61
I	2	55	50
I	1	42	38

Note: Specifications subject to change without notice. Actual performance may differ as a result of end-user environment and application.

American Electric Lighting
Acuity Brands Lighting, Inc.
3825 Columbus Rd, S.w.,Granville, OH 43023
Phone: 800-537-5710 Fax: 740-587-6114
www.americanelectriclighting.com

LEDSS EXT® POST-TOP RETROFIT KIT

The LEDSS EXT Post-Top LED Upgrade Kit easily transforms existing inefficient luminaires with HID, HPS or MH lamps into energy efficient lighting with improved efficacy and significantly lower maintenance costs. Adjustable mounting bracket system for base up or down orientation. External driver. DLC Listed.

PROJECT NAME

PART NUMBER

PART NUMBER BUILDER

MANUFACTURER	MODEL NUMBER	LUMENS	COLOR TEMPERATURE	OPTIONS
RPT	LEDSSEXT		4000K	
		1800LM 4400LM	3000K*	OCC HI/LO VARIABLE OCCUPANCY SENSOR 10VDIM 0-10V DIMMABLE 347-480V AC

*Special order

ORDERING EXAMPLE

RPT-LEDSSEXT-4400LM-4000K-10VDIM

INSTALLATION GUIDE

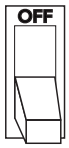

1

Turn off power to the fixture. Remove bulb and existing ballast or cut the wires to the ballast and bypass it.

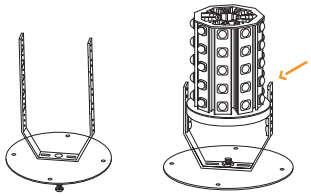

2

USING U-SHAPE BRACKET
Remove lamp base, use the screw bolt and nut to install the bracket to the hole where the lamp base was previously installed. Drive in the screws to fix the post top retrofit kit to the U-shape bracket (cut off the excess part of the bracket).

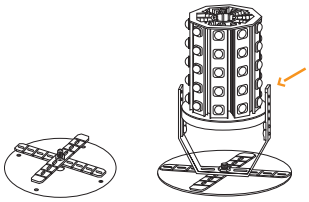

USING BREAK-OFF BRACKET
Remove lamp base, use a screw bolt and nut to fix the X-shape bracket to the hole where the post top retrofit was previously installed, attach the U-shape bracket to the X-shape bracket, fix the post top retrofit kit to the U-shape bracket (cut off the excess part of the bracket).

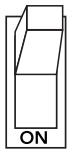

3

Install the LED driver in place of the ballast. Connect the wiring. Remove the plastic cover from the LED head. Restore power to fixture.

Simplified instructions. Reference full installation guide for more details. Only qualified personnel should perform installation.

QUICK SPECS

INPUT VOLTAGE	120-277V AC
EFFICACY	>120 LPW @ 4000K
OPERATING TEMP	-30˚C to 65˚C
MAX CASE TEMP	65˚C*
POWER FACTOR/THD	>0.90 Power Factor, THD<10%
CRI	73+
BEAM ANGLE SPREAD	360°
RATED LIFE	L70 LED Lifetime > 70,000 hrs
WARRANTY	6 years
CERTIFICATIONS	ETL Listed to UL Standards
PERFORMANCE LISTINGS	

DIMENSIONS

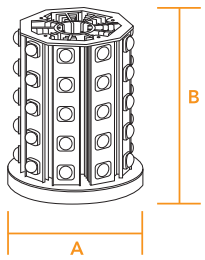

DIMENSIONS (INCHES)	A	B
RPT-LEDSSEXT-1800LM	3.66	3.0
RPT-LEDSSEXT-4400LM	3.66	4.8

* Max ambient temperature is 65C (150F). If used in a fully enclosed fixture, customer is responsible for proper thermal testing prior to use, otherwise RemPhos warranty is void.

May be protected under the following US patents - US 8,106569 | US 8,882,298 | Additional patents pending. Information is subject to change without notice.

LEDSS EXT® POST-TOP RETROFIT KIT

ORDERING GUIDE

ENERGY STAR	DLC	PART #	LUMEN OUTPUT (LM)	WATTAGE (W)	CCT (K)	VOLTAGE RANGE (V AC)	WARRANTY (YRS)	TRADITIONAL EQUIVALENT	WATTS SAVED (W)
	●	RPT-LEDSSEXT-1800LM-4000K	1800	16	4000	120-277	6	50-100W HID	up to 84
	●	RPT-LEDSSEXT-4400LM-4000K	4400	40	4000	120-277	6	100-250W HID	up to 210

FEATURES

FLEXIBLE BRACKET SYSTEM

The LEDSS EXT® comes with a proprietary adjustable bracket system for easy installation. This flexible, time saving adjustable bracket allows the light engine to be mounted to virtually any fixture in either base up or base down orientation.

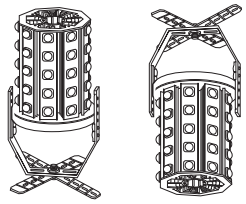

INTEGRATED PATENTED OPTICS

Integrated patented optics on each LED to direct light down to the ground and prevent wasted upwards illumination.

OPTIONAL FACTORY INSTALLED OCC SENSOR

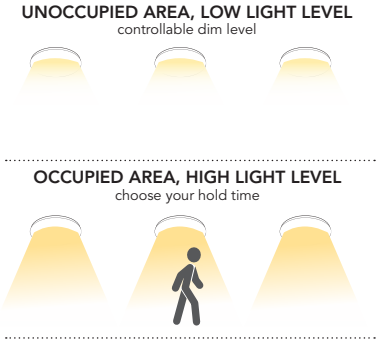

The LEDSS EXT can be paired with our integral occupancy sensor for maximum energy savings. Unlike traditional passive infrared or ultrasonic occupancy sensors, this high-frequency sensor can be hidden behind the lens of an existing fixture, eliminating the need for external sensors and providing a clean look.

EXAMPLE FIXTURES

RemPhos Technologies LLC • p 877.997.3674 • www.remphos.com
90 Holten Street • Danvers, MA USA • sales@remphos.com

Elite A19 A-Lamps

Omni-Directional and All-Purpose

High efficiency A-Lamps. Light output in all directions to suit many applications.

Limitless options for the following applications:

- General Lighting
- Floor Lamps
- Ceiling Fixtures
- Table Lamps
- Sconces

Great features and benefits:

- Energy efficient: Up to 85% more efficient than incandescent alternatives
- Smooth, uniform dimming; also available as non-dimming
- Long life: Available in 25,000 hours or 15,000 hours
- Similar look and feel as incandescent alternative
- Excellent color consistency and high color rendering (CRI)
- Available in 2400K, 2700K, 3000K, 4100K and 5000K
- Fits any installations where a standard A19 bulb is used
- Rated for totally enclosed fixtures

All-Purpose A-Lamp

Omni-Directional A-Lamp

TCP®
325 Campus Dr. | Aurora, Ohio 44202 | P: 800-324-1496 | tcpi.com

ENERGY STAR PARTNER

ELITE Series — LED A19 A-Lamp

LED	Available in 25,000 Hours or 15,000 Hours average rated life, 120 Volts

Catalog Number	
Notes	Type

Applications:

Ideal for applications where uniform multi-directional light output is required.

- Table Lamps
- Floor Lamps
- Sconces
- Ceiling Fixtures
- Decorative Fixtures

Features	Benefits
Up to 85% less energy than halogen alternatives	Instant energy savings
Long life	Minimizes replacement and maintenance costs
Very low heat generation	Perfect for sensitive display lighting such as art galleries
Excellent Color Consistency and CRI	Enhances colors of focal point while maintaining uniformity throughout lighting installation from lamp to lamp
UL approved for damp location	Can be used outdoors when protected from elements. Withstands humidity indoors/outdoors
Shatter resistant	Lower the risk of injury and breakage
ANSI construction compliant	Fits all A19 installations
Rated for totally enclosed fixtures	Can be used indoors or outdoors in enclosed fixtures

Specifications

Input Line Voltage:	120 VAC
Input Power	See Chart
Input Line Frequency	50/60HZ
Lamp Life (Rated)	25,000 hrs or 15,000 hrs
Minimum Starting Temp	-30ºC
Maximum Operating Temp	40ºC
CRI	80

A19 A-Lamp

Omni-Directional Lamps

- Excellent "technical" A-Lamp replacement
- Based on ENERGY STAR standard for omni-directional lamps
- Supported by many utility rebates

All-Purpose Lamps

- Excellent "value" A-Lamp replacement
- All-purpose lamp with excellent uniformity within 230 degrees that works well in all A-Lamp fixtures

5 YEAR WARRANTY* 25,000 HOUR LAMPS

3 YEAR WARRANTY* 15,000 HOUR LAMPS

*Based on 12 hours use per day

For the most up-to-date specs, please visit www.tcpi.com

TCP®
325 Campus Dr. | Aurora, Ohio 44202 | P: 1-800-324-1496 | tcpi.com

ENERGY STAR PARTNER

LED ELITE (25,000 HOUR LAMP LIFE)

60W Equivalent Options

c UL us

5 YEAR WARRANTY*

Warranties and Certifications	Item #	Description	Voltage	Wattage	Incandescent Wattage Comparison	Lumens	LPW	CCT	CRI	R9	M.O.L. (inches)	Diameter (inches)	Case Quantity
	10W A19 Omni-Directional A-Lamp - DIMMABLE												
	LED10A19D0D24K	10W Omni Dimmable A-Lamp - 2400K	120	10	60	640	64.0	2400K	80	>0	4.3	2.4	12
	LED10A19D0D27K *See new item* L9A19D2527K	10W Omni Dimmable A-Lamp - 2700K	120	10	60	800	80.0	2700K	80	>0	4.3	2.4	12
	LED10A19D0D30K	10W Omni Dimmable A-Lamp - 3000K	120	10	60	825	82.5	3000K	80	>0	4.3	2.4	12
	LED10A19D0D41K	10W Omni Dimmable A-Lamp - 4100K	120	10	60	850	85.0	4100K	80	>0	4.3	2.4	12
	LED10A19D0D50K	10W Omni Dimmable A-Lamp - 5000K	120	10	60	850	85.0	5000K	80	>0	4.3	2.4	12
	10W A19 Omni-Directional A-Lamp - Non Dimmable												
	LED10A190D27K *See new item* L9A19N1527K	10W Omni Non Dim A-Lamp - 2700K	120	10	60	800	80.0	2700K	80	>0	4.3	2.4	12
	LED10A190D30K *See new item* L9A19N1530K	10W Omni Non Dim A-Lamp - 3000K	120	10	60	825	82.5	3000K	80	>0	4.3	2.4	12
	LED10A190D41K *See new item* L9A19N1541K	10W Omni Non Dim A-Lamp - 4100K	120	10	60	850	85.0	4100K	80	>0	4.3	2.4	12
	10W A19 All-Purpose A-Lamp - DIMMABLE												
	LED10A19D24K	10W Dimmable A-Lamp - 2400K	120	10	60	640	64.0	2400K	80	>0	4.3	2.4	12
	LED10A19D27K *See new item* L9A19D2527K	10W Dimmable A-Lamp - 2700K	120	10	60	800	80.0	2700K	80	>0	4.3	2.4	12
	LED10A19D30K *Use* LED10A19D0D30K	10W Dimmable A-Lamp - 3000K	120	10	60	825	82.5	3000K	80	>0	4.3	2.4	12
	LED10A19D41K *Use* LED10A19D0D41K	10W Dimmable A-Lamp - 4100K	120	10	60	850	85.0	4100K	80	>0	4.3	2.4	12
	LED10A19D50K	10W Dimmable A-Lamp - 5000K	120	10	60	875	87.5	5000K	80	>0	4.3	2.4	12

40W Equivalent Options

	7W A19 Omni-Directional A-Lamp - DIMMABLE												
	LED7A19D0D24K	7W Omni Dimmable A-Lamp - 2400K	120	7	40	450	64.3	2400K	80	>0	4.3	2.4	12
	LED7A19D0D27K	7W Omni Dimmable A-Lamp - 2700K	120	7	40	450	64.3	2700K	80	>0	4.3	2.4	12
	LED7A19D0D30K	7W Omni Dimmable A-Lamp - 3000K	120	6.8	40	560	82.4	3000K	80	>0	4.3	2.4	12
	LED7A19D0D41K	7W Omni Dimmable A-Lamp - 4100K	120	6.5	40	520	80.0	4100K	80	>0	4.3	2.4	12
	LED7A19D0D50K	7W Omni Dimmable A-Lamp - 5000K	120	6.8	40	545	80.1	5000K	80	>0	4.3	2.4	12
	7W A19 All-Purpose A-Lamp - DIMMABLE												
	LED7A19D24K *Use* LED7A19D0D24K	7W Dimmable A-Lamp - 2400K	120	7	40	450	64.3	2400K	80	>0	4.3	2.4	12
	LED7A19D27K	7W Dimmable A-Lamp - 2700K	120	7	40	425	60.7	2700K	80	>0	4.3	2.4	12
	LED7A19D30K	7W Dimmable A-Lamp - 3000K	120	7	40	450	64.3	3000K	80	>0	4.3	2.4	12
	LED7A19D41K	7W Dimmable A-Lamp - 4100K	120	7	40	500	71.4	4100K	80	>0	4.3	2.4	12
	LED7A19D50K	7W Dimmable A-Lamp - 5000K	120	7	40	500	71.4	5000K	80	>0	4.3	2.4	12

LED (15,000 HOUR LAMP LIFE)

60W Equivalent Options

c UL us

3 YEAR WARRANTY*

	9W A19 All-Purpose A-Lamp - Non Dimmable												
	LED9A1927K *See new item* L9A19N1527K	9W Non Dimmable A-Lamp - 2700K	120	9	60	800	88.9	2700K	80	>0	4.3	2.4	12
	LED9A1930K *See new item* L9A19N1530K	9W Non Dimmable A-Lamp - 3000K	120	9	60	825	91.7	3000K	80	>0	4.3	2.4	12
	LED9A1941K *See new item* L9A19N1541K	9W Non Dimmable A-Lamp - 4100K	120	9	60	850	94.4	4100K	80	>0	4.3	2.4	12
	LED9A1950K	9W Non Dimmable A-Lamp - 5000K	120	9	60	850	94.4	5000K	80	>0	4.3	2.4	12

40W Equivalent Options

	5W A19 All-Purpose A-Lamp - Non Dimmable												
	LED5A1927K	5W Non Dimmable A-Lamp - 2700K	120	5	40	450	90.0	2700K	80	>0	4.3	2.4	12
	LED5A1930K	5W Non Dimmable A-Lamp - 3000K	120	5	40	475	95.0	3000K	80	>0	4.3	2.4	12
	LED5A1941K	5W Non Dimmable A-Lamp - 4100K	120	5	40	500	100.0	4100K	80	>0	4.3	2.4	12
	LED5A1950K *See new item* L6A19N1550K	5W Non Dimmable A-Lamp - 5000K	120	5	40	525	105.0	5000K	80	>0	4.3	2.4	12

*Based on 12 hours use per day

For the most up-to-date specs, please visit www.tcpi.com

TCP®
325 Campus Dr. | Aurora, Ohio 44202 | P: 1-800-324-1496 | tcpi.com

ENERGY STAR PARTNER

FXLED125T

Ultra high output, high efficiency LED floodlight with wide NEMA type 6H x 6V beam spread. Patent Pending airflow technology ensures long LED and driver lifespan. Use for general and security lighting for large areas, building facades, signs and landscapes.

Color: Bronze Weight: 25.0 lbs

Project:	Type:
Prepared By:	Date:

Driver Info		LED Info	
Type:	Constant Current	Watts:	125W
120V:	1.12A	Color Temp:	5000K
208V:	0.70A	Color Accuracy:	72 CRI
240V:	0.61A	L70 Lifespan:	100000
277V:	0.52A	Lumens:	16951
Input Watts:	132W	Efficacy:	128 LPW
Efficiency:	94%		

Technical Specifications

Listings

UL Listing:

Suitable for wet locations. Suitable for ground mounting.

IESNA LM-79 & LM-80 Testing:

RAB LED luminaries have been tested by an independent laboratory in accordance with IESNA LM-79 and LM-80, and have been received the Department of Energy "Lighting Facts" label.

DLC Listed:

This product is on the Design Lights Consortium (DLC) Qualified Products List and is eligible for rebates from DLC Member Utilities.
DLC Product Code: P0000176D

LED Characteristics

Lifespan:

100,000-hour LED lifespan based on IES LM-80 results and TM-21 calculations.

LEDs:

Multip-chip, high-output, long-life LEDs

Color Consistency:

7-step MacAdam Ellipse binning to achieve consistent fixture-to-fixture color.

Color Stability:

LED color temperature is warrantied to shift no more than 200K in CCT over a 5 year period.

Color Uniformity:

RAB's range of CCT (Correlated Color Temperature) follows the guidelines of the American National Standard for Specifications for the Chromaticity of Solid State Lighting (SSL) Products, ANSI C78.377-2015.

Construction

IP Rating:

Ingress Protection rating of IP66 for dust and water

Maximum Ambient Temperature:

Suitable for use in 104° F (40°C) ambient temperatures

Effective Projected Area:

EPA = 2

Cold Weather Starting:

Minimum starting temperature is -40° F (-40° C)

Thermal Management:

Superior thermal management with external Air-Flow fins.

Housing:

Die-cast aluminum housing and door frame

Mounting:

Heavy-duty Trunnion mount with stainless steel hardware

Reflector:

Specular, vacuum-metalized polycarbonate

Gaskets:

High-temperature silicone gaskets

Finish:

Formulated for high-durability and long lasting color.

Green Technology:

Mercury and UV free. RoHS compliant components. Polyester powder coat finish formulated without the use of VOC or toxic heavy metals.

Electrical

Drivers:

Two Drivers, Constant Current, Class 2, 1750mA, 100-277V, 50/60Hz, 1.1A, Power Factor 99%

THD:

5.1% at 120V, 16.5% at 277V

Power Factor:

99.4% at 120V, 91.8% at 277V

Optical

NEMA Type:

NEMA Beam Spread of 6H x 6V

Replacement:

Replaces 320W Metal Halide

Sensor Characteristics

Field & Beam Angles:

Horizontal Beam Angle (50%): 91.8°, Vertical Beam Angle (50%): 73.5° Horizontal Field Angle (10%): 121.0°, Vertical Field Angle (10%): 108.0°

Other

Warranty:

RAB warrants that our LED products will be free from defects in materials and workmanship for a period of five (5) years from the date of delivery to the end user, including coverage of light output, color stability, driver performance and fixture finish.

Technical Specifications (continued)

Other

Patents:

The design of FXLED125 is protected by patents pending in US, Canada, China, Taiwan and Mexico.

Country of Origin:

Designed by RAB in New Jersey and assembled in the USA by RAB's IBEW Local 3 workers.

Buy American Act Compliant:

This product is a COTS item manufactured in the United States, and is compliant with the Buy American Act.

Recovery Act (ARRA) Compliant:

This product complies with the 52.225-21 "Required Use of American Iron, Steel, and Manufactured Goods-- Buy American Act-- Construction Materials (October 2010).

GSA Schedule:

Suitable in accordance with FAR Subpart 25.4.

Dimensions

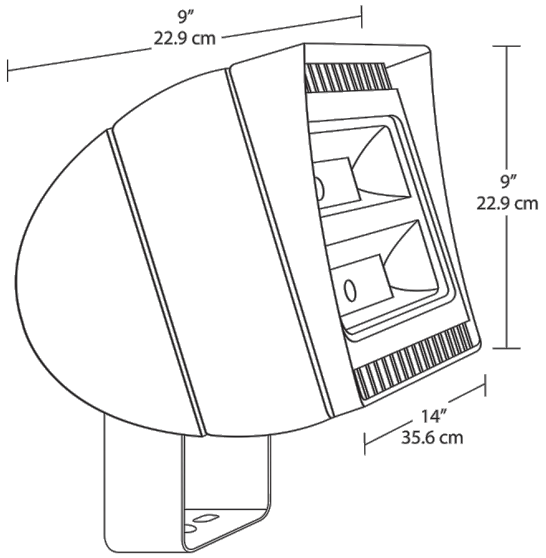

Features

- 66% energy cost savings vs. HID
- NEMA Type - 6H x 6V
- Air-Flow technology heat dissipation
- 100,000-hour LED lifespan
- 5-year warranty

Ordering Matrix

Family	Watts	Mount	Color Temp	Finish	Dimming	Voltage	Photocell	Bi-Level
FXLED								
	125 = 125W	**T** = Trunnion **SF** = Slipfitter	**Blank** = 5000K (Cool) **Y** = 3000K (Warm) **N** = 4000K (Neutral)	**Blank** = Bronze **W** = White	**Blank** = No Dimming **/D10** = Dimmable	**Blank** = 120-277V **/480** = 480V	**Blank** = No Photocell **/PCT** = 120-277V Twistlock Photocell **/PCT4** = 480V Twistlock Photocell	**Blank** = No Bi-Level **/BL** = Bi-Level

PHILIPS
ADVANCE

IOP2P32N@120V	
Brand Name	**OPTANIUM**
Ballast Type	**Electronic**
Starting Method	**Instant Start**
Lamp Connection	**Parallel**
Input Voltage	**120-277**
Input Frequency	**50/60 HZ**
Status	**Active**

Electrical Specifications

Lamp Type	Num. of Lamps	Rated Lamp Watts	Min. Start Temp (°F/C)	Input Current (Amps)	Input Power (ANSI Watts)	Ballast Factor	MAX THD %	Power Factor	MAX Lamp Current Crest Factor	B.E.F.
F17T8	1	17	-20/-29	0.17	19	1.06	10	0.99	1.6	5.58
F17T8	2	17	-20/-29	0.26	31	0.90	10	0.99	1.6	2.90
F25T8	1	25	-20/-29	0.23	28	1.05	10	0.99	1.6	3.75
F25T8	2	25	-20/-29	0.37	43	0.88	10	0.99	1.6	2.05
F32T8	1	32	-20/-29	0.30	35	1.05	10	0.99	1.6	3.00
* F32T8	2	32	-20/-29	0.47	56	0.89	10	0.99	1.6	1.59
F32T8/ES (25W)	1	25	60/16	0.23	27	1.05	10	0.99	1.6	3.89
F32T8/ES (25W)	2	25	60/16	0.39	47	0.94	10	0.99	1.6	2.00
F32T8/ES (28W)	1	28	60/16	0.26	31	1.05	10	0.99	1.6	3.39
F32T8/ES (28W)	2	28	60/16	0.43	52	0.91	10	0.99	1.6	1.75
F32T8/ES (30W)	1	30	60/16	0.28	33	1.05	10	0.99	1.6	3.18
F32T8/ES (30W)	2	30	60/16	0.44	52	0.87	10	0.99	1.6	1.67
F40T8	1	40	32/00	0.35	41	1.01	10	0.99	1.6	2.46

Wiring Diagram

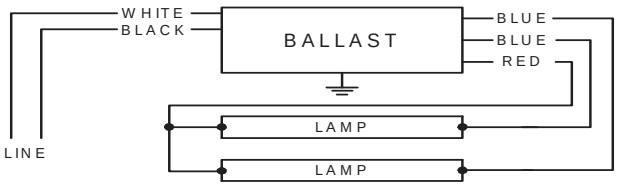

Diag. 64-A

The wiring diagram that appears above is for the lamp type denoted by the asterisk (*)

Standard Lead Length (inches)

	in.	cm.
Black	24	61
White	24	61
Blue	28	71.1
Red	43	109.2
Yellow		0
Gray		0
Violet		0

	in.	cm.
Yellow/Blue		0
Blue/White		0
Brown		0
Orange		0
Orange/Black		0
Black/White		0
Red/White		0

Enclosure

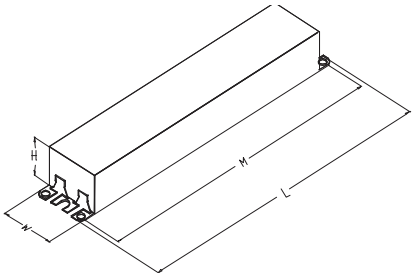

Enclosure Dimensions

OverAll (L)	Width (W)	Height (H)	Mounting (M)
9.5 "	1.3 "	1.0 "	8.9 "
9 1/2	1 3/10	1	8 9/10
24.1 cm	3.3 cm	2.5 cm	22.6 cm

RoHS COMPLIANT

Revised 03/25/14

Data is based upon tests performed by Philips Lighting N.A in a controlled environment and representative of relative performance. Actual performance can vary depending on operating conditions. Specifications are subject to change without notice. All specifications are nominal unless otherwise noted.

Philips Lighting Electronic N.A
10275 West Higgins Road Rosemont, IL 60018 Tel.: 800-322-2086 Fax: 888-432-1882
Customer Support/Technical Service: 800-372-3331 · OEM Support: 866-915-5886

PHILIPS
ADVANCE

IOP2P32N@120V	
Brand Name	**OPTANIUM**
Ballast Type	**Electronic**
Starting Method	**Instant Start**
Lamp Connection	**Parallel**
Input Voltage	**120-277**
Input Frequency	**50/60 HZ**
Status	**Active**

Electrical Specifications

Notes:

Section I - Physical Characteristics

1.1 Ballast shall be physically interchangeable with standard electromagnetic or standard electronic ballasts, where applicable.

1.2 Ballast shall be provided with integral leads color-coded per ANSI C82.11.

Section II - Performance

2.1 Ballast shall be _____ (Instant or Programmed) Start.

2.2 Ballast shall provide Independent Lamp Operation (ILO) for Instant Start or Programmed Start Parallel ballasts allowing remaining lamp(s) to maintain full light output when one or more lamps fail.

2.3 Ballast shall contain auto restart circuitry in order to restart lamps without resetting power.

2.4 Ballast shall operate from 50/60 Hz input source of _____ (120V through 277V or 347V) with sustained variations of +/- 10% (voltage and frequency).

2.5 Ballast shall be high frequency electronic type and operate lamps at a frequency between 42 kHz and 52 kHz to avoid interference with infrared devices, eliminate visible flicker and avoid Article Surveillance System, such as anti-theft devices.

2.6 Ballast shall have a Power Factor greater than 0.98 for primary lamp.

2.7 Ballast shall have a minimum ballast factor for primary lamp application as follows: 0.77 for Low Watt, 0.87 for Normal Light Output, and 1.18 for High Light for Instant Start ballasts or 0.71 for Low Watt and 0.88 for Normal Light Output for Programmed Start ballasts.

2.8 Ballast shall provide for a Lamp Current Crest Factor of 1.7 or less.

2.9 Ballast input current shall have Total Harmonic Distortion (THD) of less than 10% when operated at nominal line voltage with primary lamp.

2.10 Ballast shall have a Class A sound rating for all 4-foot lamps and smaller.

2.11 Ballast shall have a minimum starting temperature of -29C (-20F) on Instant Start ballasts or -18C (0F) on Programmed Start ballasts for standard T8 lamps and 16C (60F) for energy-saving T8 lamps. Consult lamp manufacturer for temperature versus light output characteristics.

2.12 Ballast shall tolerate sustained open circuit and short circuit output conditions.

2.13 Ballast shall have lamp striation-reduction circuitry.

2.14 Maximum distance for Energy Saving Lamps in Remote/Tandem wiring applications shall be 6 feet for Instant Start and Programmed Start models.

Section III - Regulatory

3.1 Ballast shall not contain any Polychlorinated Biphenyl (PCB).

3.2 Ballast shall be Underwriters Laboratories (UL) listed, Class P and Type 1 Outdoor; and Canadian Standards Association (CSA) certified where applicable.

3.3 Ballast shall comply with ANSI C62.41 Category A for Transient protection.

3.4 Ballast shall comply with ANSI C82.11 where applicable.

3.5 Ballast shall comply with applicable requirements of the Federal Communications Commission (FCC) rules and regulations, Title 47 CFR part 18, for Non-Consumer equipment.

3.6 Ballast shall meet NEMA Premium/CEE High Performance T8 Lighting System Specifications.

3.7 IOP or GOP ballast shall comply with UL Type CC rating.

3.8 Ballast shall comply with NEMA 410 for in-rush current limits.

3.9 Ballast shall meet RoHS Compliance Standards

Section IV - Other

4.1 Ballast shall be manufactured in an ISO 9001 Qualified factory.

4.2 Ballast shall carry a five-year warranty from date of manufacture against defects in material or workmanship, including replacement, for operation at a maximum case temperature of 70C. Ballasts with a "90C" designation in their catalog number shall also carry a three-year warranty at maximum case temperature of 90C.

4.3 Manufacturer shall have a twenty-year history of producing electronic ballasts for the North American market.

4.4 Energy-saving T8 lamps (25W, 28W or 30W) may experience lamp striations if operated on ballasts not rated for their use.

RoHS COMPLIANT

Revised 03/25/14

Philips Lighting Electronic N.A.
10275 West Higgins Road Rosemont, IL 60018 Tel.: 800-322-2086 Fax: 888-432-1882
Customer Support/Technical Service: 800-372-3331 · OEM Support: 866-915-5886

PHILIPS
ADVANCE

IOP2P32N@277V	
Brand Name	**OPTANIUM**
Ballast Type	**Electronic**
Starting Method	**Instant Start**
Lamp Connection	**Parallel**
Input Voltage	**120-277**
Input Frequency	**50/60 HZ**
Status	**Active**

Electrical Specifications

Lamp Type	Num. of Lamps	Rated Lamp Watts	Min. Start Temp (°F/C)	Input Current (Amps)	Input Power (ANSI Watts)	Ballast Factor	MAX THD %	Power Factor	MAX Lamp Current Crest Factor	B.E.F.
F17T8	1	17	-20/-29	0.08	19	1.06	10	0.98	1.6	5.58
F17T8	2	17	-20/-29	0.11	31	0.90	10	0.98	1.6	2.90
F25T8	1	25	-20/-29	0.10	28	1.05	10	0.98	1.6	3.75
F25T8	2	25	-20/-29	0.16	43	0.88	10	0.98	1.6	2.05
F32T8	1	32	-20/-29	0.13	35	1.05	10	0.98	1.6	3.00
* F32T8	2	32	-20/-29	0.20	55	0.89	10	0.98	1.6	1.62
F32T8/ES (25W)	1	25	60/16	0.10	27	1.05	10	0.98	1.6	3.89
F32T8/ES (25W)	2	25	60/16	0.17	46	0.94	10	0.99	1.6	2.04
F32T8/ES (28W)	1	28	60/16	0.11	31	1.05	10	0.98	1.6	3.39
F32T8/ES (28W)	2	28	60/16	0.18	50	0.91	10	0.98	1.6	1.82
F32T8/ES (30W)	1	30	60/16	0.12	33	1.05	10	0.98	1.6	3.18
F32T8/ES (30W)	2	30	60/16	0.19	51	0.87	10	0.98	1.6	1.71
F40T8	1	40	32/00	0.15	41	1.01	10	0.98	1.6	2.46

Wiring Diagram

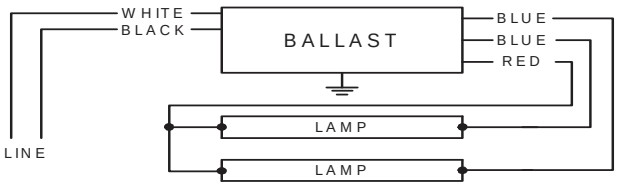

Diag. 64-A

The wiring diagram that appears above is for the lamp type denoted by the asterisk (*)

Standard Lead Length (inches)

	in.	cm.
Black	24	61
White	24	61
Blue	28	71.1
Red	43	109.2
Yellow		0
Gray		0
Violet		0

	in.	cm.
Yellow/Blue		0
Blue/White		0
Brown		0
Orange		0
Orange/Black		0
Black/White		0
Red/White		0

Enclosure

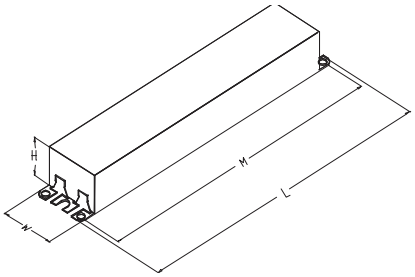

Enclosure Dimensions

OverAll (L)	Width (W)	Height (H)	Mounting (M)
9.5 "	1.3 "	1.0 "	8.9 "
9 1/2	1 3/10	1	8 9/10
24.1 cm	3.3 cm	2.5 cm	22.6 cm

RoHS COMPLIANT

Revised 03/25/14

Data is based upon tests performed by Philips Lighting N.A in a controlled environment and representative of relative performance. Actual performance can vary depending on operating conditions. Specifications are subject to change without notice. All specifications are nominal unless otherwise noted.

Philips Lighting Electronic N.A
10275 West Higgins Road Rosemont, IL 60018 Tel.: 800-322-2086 Fax: 888-432-1882
Customer Support/Technical Service: 800-372-3331 · OEM Support: 866-915-5886

PHILIPS
ADVANCE

IOP2P32N@277V	
Brand Name	**OPTANIUM**
Ballast Type	**Electronic**
Starting Method	**Instant Start**
Lamp Connection	**Parallel**
Input Voltage	**120-277**
Input Frequency	**50/60 HZ**
Status	**Active**

Electrical Specifications

Notes:

Section I - Physical Characteristics

1.1 Ballast shall be physically interchangeable with standard electromagnetic or standard electronic ballasts, where applicable.

1.2 Ballast shall be provided with integral leads color-coded per ANSI C82.11.

Section II - Performance

2.1 Ballast shall be _____ (Instant or Programmed) Start.

2.2 Ballast shall provide Independent Lamp Operation (ILO) for Instant Start or Programmed Start Parallel ballasts allowing remaining lamp(s) to maintain full light output when one or more lamps fail.

2.3 Ballast shall contain auto restart circuitry in order to restart lamps without resetting power.

2.4 Ballast shall operate from 50/60 Hz input source of _____ (120V through 277V or 347V) with sustained variations of +/- 10% (voltage and frequency).

2.5 Ballast shall be high frequency electronic type and operate lamps at a frequency between 42 kHz and 52 kHz to avoid interference with infrared devices, eliminate visible flicker and avoid Article Surveillance System, such as anti-theft devices.

2.6 Ballast shall have a Power Factor greater than 0.98 for primary lamp.

2.7 Ballast shall have a minimum ballast factor for primary lamp application as follows: 0.77 for Low Watt, 0.87 for Normal Light Output, and 1.18 for High Light for Instant Start ballasts or 0.71 for Low Watt and 0.88 for Normal Light Output for Programmed Start ballasts.

2.8 Ballast shall provide for a Lamp Current Crest Factor of 1.7 or less.

2.9 Ballast input current shall have Total Harmonic Distortion (THD) of less than 10% when operated at nominal line voltage with primary lamp.

2.10 Ballast shall have a Class A sound rating for all 4-foot lamps and smaller.

2.11 Ballast shall have a minimum starting temperature of -29C (-20F) on Instant Start ballasts or -18C (0F) on Programmed Start ballasts for standard T8 lamps and 16C (60F) for energy-saving T8 lamps. Consult lamp manufacturer for temperature versus light output characteristics.

2.12 Ballast shall tolerate sustained open circuit and short circuit output conditions.

2.13 Ballast shall have lamp striation-reduction circuitry.

2.14 Maximum distance for Energy Saving Lamps in Remote/Tandem wiring applications shall be 6 feet for Instant Start and Programmed Start models.

Section III - Regulatory

3.1 Ballast shall not contain any Polychlorinated Biphenyl (PCB).

3.2 Ballast shall be Underwriters Laboratories (UL) listed, Class P and Type 1 Outdoor; and Canadian Standards Association (CSA) certified where applicable.

3.3 Ballast shall comply with ANSI C62.41 Category A for Transient protection.

3.4 Ballast shall comply with ANSI C82.11 where applicable.

3.5 Ballast shall comply with applicable requirements of the Federal Communications Commission (FCC) rules and regulations, Title 47 CFR part 18, for Non-Consumer equipment.

3.6 Ballast shall meet NEMA Premium/CEE High Performance T8 Lighting System Specifications.

3.7 IOP or GOP ballast shall comply with UL Type CC rating.

3.8 Ballast shall comply with NEMA 410 for in-rush current limits.

3.9 Ballast shall meet RoHS Compliance Standards

Section IV - Other

4.1 Ballast shall be manufactured in an ISO 9001 Qualified factory.

4.2 Ballast shall carry a five-year warranty from date of manufacture against defects in material or workmanship, including replacement, for operation at a maximum case temperature of 70C. Ballasts with a "90C" designation in their catalog number shall also carry a three-year warranty at maximum case temperature of 90C.

4.3 Manufacturer shall have a twenty-year history of producing electronic ballasts for the North American market.

4.4 Energy-saving T8 lamps (25W, 28W or 30W) may experience lamp striations if operated on ballasts not rated for their use.

RoHS COMPLIANT

Revised 03/25/14

Philips Lighting Electronic N.A.
10275 West Higgins Road Rosemont, IL 60018 Tel.: 800-322-2086 Fax: 888-432-1882
Customer Support/Technical Service: 800-372-3331 · OEM Support: 866-915-5886

PHILIPS
ADVANCE

IOP4P32N@120V	
Brand Name	**OPTANIUM**
Ballast Type	**Electronic**
Starting Method	**Instant Start**
Lamp Connection	**Parallel**
Input Voltage	**120-277**
Input Frequency	**50/60 HZ**
Status	**Active**

Electrical Specifications

Lamp Type	Num. of Lamps	Rated Lamp Watts	Min. Start Temp (°F/C)	Input Current (Amps)	Input Power (ANSI Watts)	Ballast Factor	MAX THD %	Power Factor	MAX Lamp Current Crest Factor	B.E.F.
F17T8	3	17	-20/-29	0.41	49	1.00	10	0.98	1.6	2.04
F17T8	4	17	-20/-29	0.49	58	0.90	10	0.98	1.6	1.55
F25T8	3	25	-20/-29	0.59	71	0.97	10	0.98	1.6	1.37
F25T8	4	25	-20/-29	0.72	85	0.88	10	0.98	1.6	1.04
F32T8	3	32	-20/-29	0.75	90	0.97	10	0.98	1.6	1.08
* F32T8	4	32	-20/-29	0.92	109	0.87	10	0.98	1.6	0.80
F32T8/ES (25W)	3	25	60/16	0.59	70	0.97	10	0.98	1.6	1.39
F32T8/ES (25W)	4	25	60/16	0.73	87	0.87	10	0.98	1.6	1.00
F32T8/ES (28W)	3	28	60/16	0.66	79	0.97	10	0.98	1.6	1.23
F32T8/ES (28W)	4	28	60/16	0.81	96	0.87	10	0.98	1.6	0.91
F32T8/ES (30W)	3	30	60/16	0.70	84	0.97	10	0.98	1.6	1.15
F32T8/ES (30W)	4	30	60/16	0.86	102	0.87	10	0.98	1.6	0.85
F40T8	3	40	32/00	0.92	110	0.93	10	0.98	1.6	0.85

Wiring Diagram

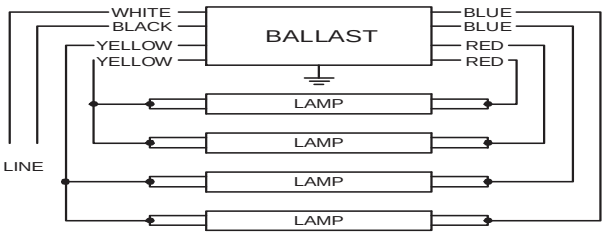

Diag. 66

The wiring diagram that appears above is for the lamp type denoted by the asterisk (*)

Standard Lead Length (inches)

	in.	cm.
Black	24	61
White	24	61
Blue	28	71.1
Red	28	71.1
Yellow	47	119.4
Gray		0
Violet		0

	in.	cm.
Yellow/Blue		0
Blue/White		0
Brown		0
Orange		0
Orange/Black		0
Black/White		0
Red/White		0

Enclosure

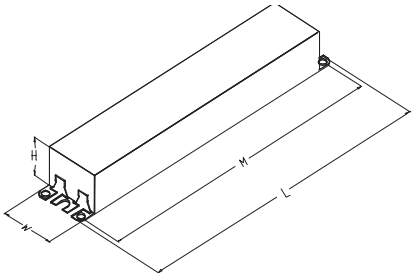

Enclosure Dimensions

OverAll (L)	Width (W)	Height (H)	Mounting (M)
9.50 "	1.7 "	1.18 "	8.90 "
9 1/2	1 7/10	1 9/50	8 9/10
24.1 cm	4.3 cm	3 cm	22.6 cm

RoHS COMPLIANT

Revised 08/02/13

Data is based upon tests performed by Philips Lighting N.A in a controlled environment and representative of relative performance. Actual performance can vary depending on operating conditions. Specifications are subject to change without notice. All specifications are nominal unless otherwise noted.

Philips Lighting Electronic N.A
10275 West Higgins Road Rosemont, IL 60018 Tel.: 800-322-2086 Fax: 888-432-1882
Customer Support/Technical Service: 800-372-3331 · OEM Support: 866-915-5886

PHILIPS
ADVANCE

IOP4P32N@120V	
Brand Name	**OPTANIUM**
Ballast Type	**Electronic**
Starting Method	**Instant Start**
Lamp Connection	**Parallel**
Input Voltage	**120-277**
Input Frequency	**50/60 HZ**
Status	**Active**

Electrical Specifications

Notes:

Section I - Physical Characteristics

1.1 Ballast shall be physically interchangeable with standard electromagnetic or standard electronic ballasts, where applicable.

1.2 Ballast shall be provided with integral leads color-coded per ANSI C82.11.

Section II - Performance

2.1 Ballast shall be _____ (Instant or Programmed) Start.

2.2 Ballast shall provide Independent Lamp Operation (ILO) for Instant Start or Programmed Start Parallel ballasts allowing remaining lamp(s) to maintain full light output when one or more lamps fail.

2.3 Ballast shall contain auto restart circuitry in order to restart lamps without resetting power.

2.4 Ballast shall operate from 50/60 Hz input source of _____ (120V through 277V or 347V) with sustained variations of +/- 10% (voltage and frequency).

2.5 Ballast shall be high frequency electronic type and operate lamps at a frequency between 42 kHz and 52 kHz to avoid interference with infrared devices, eliminate visible flicker and avoid Article Surveillance System, such as anti-theft devices.

2.6 Ballast shall have a Power Factor greater than 0.98 for primary lamp.

2.7 Ballast shall have a minimum ballast factor for primary lamp application as follows: 0.77 for Low Watt, 0.87 for Normal Light Output, and 1.18 for High Light for Instant Start ballasts or 0.71 for Low Watt and 0.88 for Normal Light Output for Programmed Start ballasts.

2.8 Ballast shall provide for a Lamp Current Crest Factor of 1.7 or less.

2.9 Ballast input current shall have Total Harmonic Distortion (THD) of less than 10% when operated at nominal line voltage with primary lamp.

2.10 Ballast shall have a Class A sound rating for all 4-foot lamps and smaller.

2.11 Ballast shall have a minimum starting temperature of -29C (-20F) on Instant Start ballasts or -18C (0F) on Programmed Start ballasts for standard T8 lamps and 16C (60F) for energy-saving T8 lamps. Consult lamp manufacturer for temperature versus light output characteristics.

2.12 Ballast shall tolerate sustained open circuit and short circuit output conditions.

2.13 Ballast shall have lamp striation-reduction circuitry.

2.14 Maximum distance for Energy Saving Lamps in Remote/Tandem wiring applications shall be 6 feet for Instant Start and Programmed Start models.

Section III - Regulatory

3.1 Ballast shall not contain any Polychlorinated Biphenyl (PCB).

3.2 Ballast shall be Underwriters Laboratories (UL) listed, Class P and Type 1 Outdoor; and Canadian Standards Association (CSA) certified where applicable.

3.3 Ballast shall comply with ANSI C62.41 Category A for Transient protection.

3.4 Ballast shall comply with ANSI C82.11 where applicable.

3.5 Ballast shall comply with applicable requirements of the Federal Communications Commission (FCC) rules and regulations, Title 47 CFR part 18, for Non-Consumer equipment.

3.6 Ballast shall meet NEMA Premium/CEE High Performance T8 Lighting System Specifications.

3.7 IOP or GOP ballast shall comply with UL Type CC rating.

3.8 Ballast shall comply with NEMA 410 for in-rush current limits.

3.9 Ballast shall meet RoHS Compliance Standards

Section IV - Other

4.1 Ballast shall be manufactured in an ISO 9001 Qualified factory.

4.2 Ballast shall carry a five-year warranty from date of manufacture against defects in material or workmanship, including replacement, for operation at a maximum case temperature of 70C. Ballasts with a "90C" designation in their catalog number shall also carry a three-year warranty at maximum case temperature of 90C.

4.3 Manufacturer shall have a twenty-year history of producing electronic ballasts for the North American market.

4.4 Energy-saving T8 lamps (25W, 28W or 30W) may experience lamp striations if operated on ballasts not rated for their use.

RoHS COMPLIANT

Revised 08/02/13

Philips Lighting Electronic N.A.
10275 West Higgins Road Rosemont, IL 60018 Tel.: 800-322-2086 Fax: 888-432-1882
Customer Support/Technical Service: 800-372-3331 · OEM Support: 866-915-5886

PHILIPS
ADVANCE

IOP4P32N@277V	
Brand Name	**OPTANIUM**
Ballast Type	**Electronic**
Starting Method	**Instant Start**
Lamp Connection	**Parallel**
Input Voltage	**120-277**
Input Frequency	**50/60 HZ**
Status	**Active**

Electrical Specifications

Lamp Type	Num. of Lamps	Rated Lamp Watts	Min. Start Temp (°F/C)	Input Current (Amps)	Input Power (ANSI Watts)	Ballast Factor	MAX THD %	Power Factor	MAX Lamp Current Crest Factor	B.E.F.
F17T8	3	17	-20/-29	0.18	49	1.00	10	0.98	1.6	2.04
F17T8	4	17	-20/-29	0.22	59	0.90	10	0.98	1.6	1.53
F25T8	3	25	-20/-29	0.26	70	0.97	10	0.98	1.6	1.39
F25T8	4	25	-20/-29	0.31	83	0.88	10	0.98	1.6	1.06
* F32T8	3	32	-20/-29	0.32	88	0.97	10	0.98	1.6	1.10
F32T8	4	32	-20/-29	0.39	106	0.87	10	0.98	1.6	0.82
F32T8/ES (25W)	3	25	60/16	0.26	69	0.97	10	0.98	1.6	1.41
F32T8/ES (25W)	4	25	60/16	0.31	85	0.87	10	0.98	1.6	1.02
F32T8/ES (28W)	3	28	60/16	0.28	78	0.87	10	0.98	1.6	1.12
F32T8/ES (28W)	4	28	60/16	0.35	94	0.87	10	0.98	1.6	0.93
F32T8/ES (30W)	3	30	60/16	0.30	82	0.97	10	0.98	1.6	1.18
F32T8/ES (30W)	4	30	60/16	0.37	100	0.87	10	0.98	1.6	0.87
F40T8	3	40	32/00	0.38	107	0.93	10	0.98	1.6	0.87

Wiring Diagram

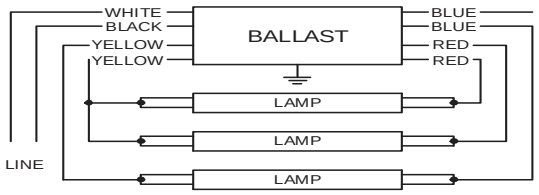

Diag. 71

Insulate unused blue lead for 1000V

The wiring diagram that appears above is for the lamp type denoted by the asterisk (*)

Standard Lead Length (inches)

	in.	cm.
Black	24	61
White	24	61
Blue	28	71.1
Red	28	71.1
Yellow	47	119.4
Gray		0
Violet		0

	in.	cm.
Yellow/Blue		0
Blue/White		0
Brown		0
Orange		0
Orange/Black		0
Black/White		0
Red/White		0

Enclosure

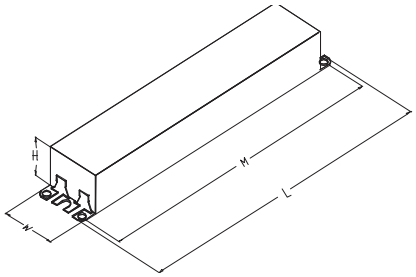

Enclosure Dimensions

OverAll (L)	Width (W)	Height (H)	Mounting (M)
9.50 "	1.7 "	1.18 "	8.90 "
9 1/2	1 7/10	1 9/50	8 9/10
24.1 cm	4.3 cm	3 cm	22.6 cm

RoHS COMPLIANT

Revised 08/02/13

Data is based upon tests performed by Philips Lighting N.A in a controlled environment and representative of relative performance. Actual performance can vary depending on operating conditions. Specifications are subject to change without notice. All specifications are nominal unless otherwise noted.

Philips Lighting Electronic N.A
10275 West Higgins Road Rosemont, IL 60018 Tel.: 800-322-2086 Fax: 888-432-1882
Customer Support/Technical Service: 800-372-3331 · OEM Support: 866-915-5886

PHILIPS
ADVANCE

IOP4P32N@277V	
Brand Name	**OPTANIUM**
Ballast Type	**Electronic**
Starting Method	**Instant Start**
Lamp Connection	**Parallel**
Input Voltage	**120-277**
Input Frequency	**50/60 HZ**
Status	**Active**

Electrical Specifications

Notes:

Section I - Physical Characteristics

1.1 Ballast shall be physically interchangeable with standard electromagnetic or standard electronic ballasts, where applicable.

1.2 Ballast shall be provided with integral leads color-coded per ANSI C82.11.

Section II - Performance

2.1 Ballast shall be _____ (Instant or Programmed) Start.

2.2 Ballast shall provide Independent Lamp Operation (ILO) for Instant Start or Programmed Start Parallel ballasts allowing remaining lamp(s) to maintain full light output when one or more lamps fail.

2.3 Ballast shall contain auto restart circuitry in order to restart lamps without resetting power.

2.4 Ballast shall operate from 50/60 Hz input source of _____ (120V through 277V or 347V) with sustained variations of +/- 10% (voltage and frequency).

2.5 Ballast shall be high frequency electronic type and operate lamps at a frequency between 42 kHz and 52 kHz to avoid interference with infrared devices, eliminate visible flicker and avoid Article Surveillance System, such as anti-theft devices.

2.6 Ballast shall have a Power Factor greater than 0.98 for primary lamp.

2.7 Ballast shall have a minimum ballast factor for primary lamp application as follows: 0.77 for Low Watt, 0.87 for Normal Light Output, and 1.18 for High Light for Instant Start ballasts or 0.71 for Low Watt and 0.88 for Normal Light Output for Programmed Start ballasts.

2.8 Ballast shall provide for a Lamp Current Crest Factor of 1.7 or less.

2.9 Ballast input current shall have Total Harmonic Distortion (THD) of less than 10% when operated at nominal line voltage with primary lamp.

2.10 Ballast shall have a Class A sound rating for all 4-foot lamps and smaller.

2.11 Ballast shall have a minimum starting temperature of -29C (-20F) on Instant Start ballasts or -18C (0F) on Programmed Start ballasts for standard T8 lamps and 16C (60F) for energy-saving T8 lamps. Consult lamp manufacturer for temperature versus light output characteristics.

2.12 Ballast shall tolerate sustained open circuit and short circuit output conditions.

2.13 Ballast shall have lamp striation-reduction circuitry.

2.14 Maximum distance for Energy Saving Lamps in Remote/Tandem wiring applications shall be 6 feet for Instant Start and Programmed Start models.

Section III - Regulatory

3.1 Ballast shall not contain any Polychlorinated Biphenyl (PCB).

3.2 Ballast shall be Underwriters Laboratories (UL) listed, Class P and Type 1 Outdoor; and Canadian Standards Association (CSA) certified where applicable.

3.3 Ballast shall comply with ANSI C62.41 Category A for Transient protection.

3.4 Ballast shall comply with ANSI C82.11 where applicable.

3.5 Ballast shall comply with applicable requirements of the Federal Communications Commission (FCC) rules and regulations, Title 47 CFR part 18, for Non-Consumer equipment.

3.6 Ballast shall meet NEMA Premium/CEE High Performance T8 Lighting System Specifications.

3.7 IOP or GOP ballast shall comply with UL Type CC rating.

3.8 Ballast shall comply with NEMA 410 for in-rush current limits.

3.9 Ballast shall meet RoHS Compliance Standards

Section IV - Other

4.1 Ballast shall be manufactured in an ISO 9001 Qualified factory.

4.2 Ballast shall carry a five-year warranty from date of manufacture against defects in material or workmanship, including replacement, for operation at a maximum case temperature of 70C. Ballasts with a "90C" designation in their catalog number shall also carry a three-year warranty at maximum case temperature of 90C.

4.3 Manufacturer shall have a twenty-year history of producing electronic ballasts for the North American market.

4.4 Energy-saving T8 lamps (25W, 28W or 30W) may experience lamp striations if operated on ballasts not rated for their use.

RoHS COMPLIANT

Revised 08/02/13

Philips Lighting Electronic N.A.
10275 West Higgins Road Rosemont, IL 60018 Tel.: 800-322-2086 Fax: 888-432-1882
Customer Support/Technical Service: 800-372-3331 · OEM Support: 866-915-5886

Lumination™ LED Luminaires

LRX Round Series
LED Downlights

Project name _____
Date _____
Type _____

Product Description:

The Lumination LRX Series LED downlights are the ideal retrofit or new construction solution for traditional downlight fixtures. They install in just minutes into most 4-inch, 6-inch, and 8-inch rough-in frames and bring afresh look to the space. Unlike plug-in LED lamps, the LRX downlight givesyou a new power supply and 50,000 hour life rating, so that you won'thave to worry about compatibility or maintenance issues with the original ballasts. All downlights in the LRX family utilize a non-conductive polycarbonate trim perfect for wet rated applications.

Performance Summary:

NOMINAL LUMENS	650	1000	1800	3000
Delivered Lumens-LRXR4	700	1020	N/A	N/A
Delivered Lumens-LRXR6	700	1050	1900	N/A
Delivered Lumens-LRXR8	750	1200	2000	3300
System Input Power (W)	8.5	13	22	35
System Efficacy (LPW)	88	92	91	94

*LPW based on LRXR8

Input Voltage: 120 - 277V
Standard Dimming Controls: 0-10V down to 10%
CCT: 3000K, 3500K, 4000K
CRI: 82
Lifetime Rating: L85 @ 50,000 Hours
Input Frequency (Hz): 50/60Hz
Power Factor: >0.9
Mounting Options: Spring clips clamp on to existing frame or directly to ceiling
Weight: 0.6 lb
IC Rating: Non-IC Rated
Limited Warranty: 5 years system
Files Available: LM79, LM80, IES

Product Dimensions:

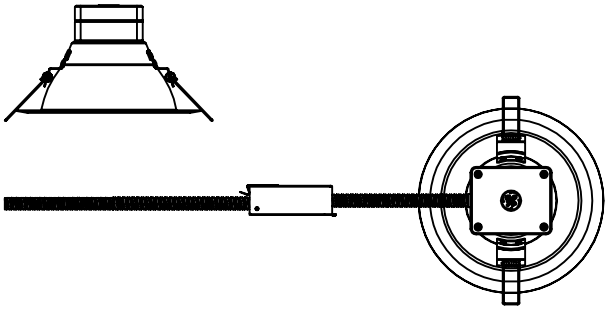

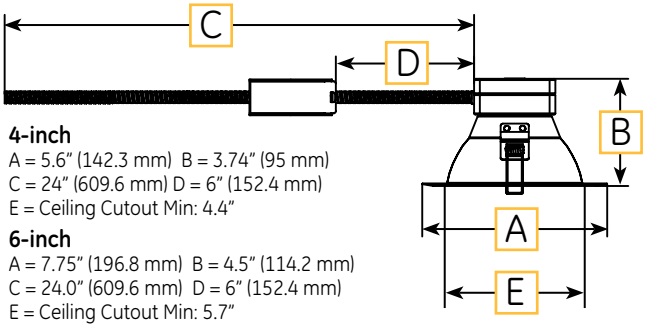

4-inch
A = 5.6" (142.3 mm) B = 3.74" (95 mm)
C = 24" (609.6 mm) D = 6" (152.4 mm)
E = Ceiling Cutout Min: 4.4"

6-inch
A = 7.75" (196.8 mm) B = 4.5" (114.2 mm)
C = 24.0" (609.6 mm) D = 6" (152.4 mm)
E = Ceiling Cutout Min: 5.7"

8-inch
A = 9.75" (247.6 mm) B = 5.1" (129.4 mm)
C = 24.0" (609.6 mm) D = 6" (152.4 mm)
E = Ceiling Cutout Min: 7.7"

Listings: c UL us LISTED
- UL and cUL Listed.
- Suitable for wet locations

ENERGY STAR

DaintreeNetworks Simplifying Building Energy Management

a product of ecomagination℠

Ordering Information:

LRX	R	__	8	__	MD	__
PRODUCT FAMILY	SHAPE/SIZE	LUMENS	CRI	CCT	DIMMING	OPTIONS
LRX = Lumination RX Series Downlight	**R4** = 4" Round Retrofit Downlight	**10**[1] = 1000lm/650lm	**8** = 82 CRI	**30** = 3000K **35** = 3500K **40** = 4000K	**MD** = 0-10V Dimming	**BLANK** = None **EL**[2] = EMBB Ready
	R6 = 6" Round Retrofit Downlight	**10**[1] = 1000lm/650lm **18** = 1800lm				[2] Must order "EL" option + LRXEMBBKIT (sold separately) for complete EMBB solution.
	R8 = 8" Round Retrofit Downlight	**10**[1] = 1000lm/650lm **18** = 1800lm **30** = 3000lm [1] 1000lm models feature a selectable lumen package to allow field adjustments to light output. See page 2 for further info.				

current powered by GE

Photometric Data: Lumination™ LRX Series Downlights

LRXR410830MD

LUMINANCE DATA (CD/SQ.M)			
Angle	0°	45°	90°
45°	44163	43507	44576
55°	31383	30998	31794
65°	19283	19142	19599
75°	12977	12649	12986
85°	6327	6456	8002

ZONAL LUMEN SUMMARY	
Zone	Lumens
0-10	50.98
10-20	143.53
20-30	208.85
30-40	226.68
40-50	194.68
50-60	131.45
60-70	66.78
70-80	29.04
80-90	6.9
90-100	0.04
100-110	0.04
110-120	0.03
120-130	0.02
130-140	0.02
140-150	0.02
150-160	0.02
160-170	0.01
170-180	0.00

COEFFICIENTS OF UTILIZATION																		
RC	80%				70%				50%			30%			10%			0%
RW	70%	50%	30%	10%	70%	50%	30%	10%	50%	30%	10%	50%	30%	10%	50%	30%	10%	0%
0	119	119	119	119	116	116	116	116	111	111	111	106	106	106	102	102	102	100
1	111	107	103	100	108	105	102	99	101	98	96	97	95	93	93	92	90	88
2	103	96	90	85	100	94	89	84	90	86	82	87	84	80	84	81	79	77
3	95	86	79	73	92	84	78	73	81	76	71	79	74	70	76	72	69	67
4	88	77	70	64	86	76	69	63	74	67	63	71	66	62	69	65	61	59
5	81	70	62	56	79	69	62	56	67	60	55	65	59	55	63	58	54	52
6	76	64	56	50	74	63	55	50	61	54	49	60	54	49	58	53	49	47
7	71	58	50	45	69	58	50	45	56	49	44	55	49	44	53	48	44	42
8	66	54	46	41	65	53	46	40	52	45	40	51	44	40	49	44	40	38
9	62	50	42	37	61	49	42	37	48	41	37	47	41	37	46	40	36	35
10	58	46	39	34	57	46	38	34	45	38	34	44	38	33	43	37	33	32

ZONAL LUMEN SUMMARY			
Zone	Lumens	% of Lamp	% of Fixture
0-20	194.51	N.A.	18.4
0-30	403.36	N.A.	38.1
0-40	630.04	N.A.	59.5
0-60	956.17	N.A.	90.3
0-80	1052	N.A.	99.3
0-90	1058.9	N.A.	100

POLAR GRAPH

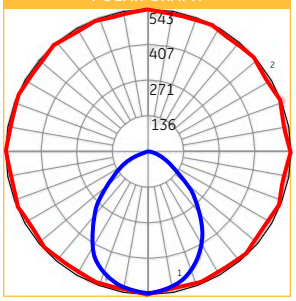

LRXR610830MD

ZONAL LUMEN SUMMARY	
Zone	Lumens
0-10°	48.26
10-20°	135.99
20-30°	199.14
30-40°	221.96
40-50°	188.12
50-60°	118.95
60-70°	54.04
70-80°	25.47
80-90°	7.78
90-100°	0.06
100-110°	0.02
110-120°	0.03
120-130°	0.03
130-140°	0.04
140-150°	0.05
150-160°	0.05
160-170°	0.03
170-180°	0.01

COEFFICIENTS OF UTILIZATION																		
RC	80%				70%				50%			30%			10%			0%
RW	70%	50%	30%	10%	70%	50%	30%	10%	50%	30%	10%	50%	30%	10%	50%	30%	10%	0%
0	119	119	119	119	116	116	116	116	111	111	111	106	106	106	102	102	102	100
1	111	107	104	100	108	105	102	99	101	98	96	97	95	93	93	92	90	88
2	103	96	90	85	100	94	89	85	91	86	83	87	84	81	85	82	79	77
3	95	86	79	74	93	85	78	73	82	76	72	79	75	71	77	73	69	68
4	88	78	70	64	86	76	69	64	74	68	63	72	67	62	70	65	62	60
5	82	70	63	57	80	69	62	57	67	61	56	66	60	55	64	59	55	53
6	76	64	56	51	74	63	56	50	62	55	50	60	54	50	59	53	49	47
7	71	59	51	45	69	58	51	45	57	50	45	55	49	45	54	48	44	43
8	66	54	46	41	65	53	46	41	52	45	41	51	45	40	50	44	40	39
9	62	50	42	37	61	49	42	37	48	42	37	47	41	37	46	41	37	35
10	59	46	39	34	57	46	39	34	45	38	34	44	38	34	43	38	34	32

NOTE: Floor Cavity Reflectance : 20%

ZONAL LUMEN SUMMARY		
Zone	Lumens	% of Fixture
0-20°	184.25	18.40
0-30°	383.39	38.30
0-40°	605.34	60.50
0-60°	912.41	91.20
0-80°	991.92	99.20
0-90°	999.70	100.00

LUMINANCE DATA (CANDELA/m²)			
Gamma	0°	45°	90°
45°	17519	17519	17519
55°	11682	11682	11682
65°	6286	6286	6286
75°	4723	4723	4723
85°	4000	4000	4000

POLAR GRAPH

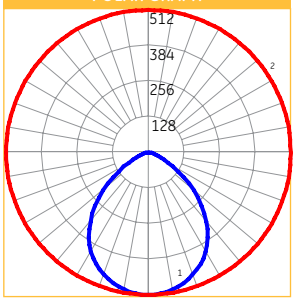

Photometric Data: Lumination™ LRX Series Downlights

LRXR818830MD

ZONAL LUMEN SUMMARY	
Zone	Lumens
0-10°	87.00
10-20°	245.00
20-30°	357.94
30-40°	405.72
40-50°	355.72
50-60°	213.19
60-70°	84.35
70-80°	37.58
80-90°	10.61
90-100°	0.07
100-110°	0.14
110-120°	0.29
120-130°	0.44
130-140°	0.54
140-150°	0.55
150-160°	0.48
160-170°	0.31
170-180°	0.10

COEFFICIENTS OF UTILIZATION																		
RC	80%				70%				50%			30%			10%			0%
RW	70%	50%	30%	10%	70%	50%	30%	10%	50%	30%	10%	50%	30%	10%	50%	30%	10%	0%
0	119	119	119	119	116	116	116	116	111	111	111	106	106	106	102	102	102	100
1	111	107	104	101	108	105	102	99	101	98	96	97	95	93	94	92	90	88
2	103	96	91	86	101	94	89	85	91	87	83	88	84	81	85	82	79	78
3	95	87	80	74	93	85	79	74	82	77	72	80	75	71	77	73	70	68
4	88	78	71	65	86	77	70	65	75	68	64	72	67	63	70	66	62	60
5	82	71	63	57	80	70	63	57	68	61	56	66	60	56	64	59	55	53
6	76	65	57	51	75	64	56	51	62	55	50	60	54	50	59	54	50	48
7	71	59	51	46	70	58	51	46	57	50	45	56	50	45	54	49	45	43
8	67	54	47	41	65	54	46	41	52	46	41	51	45	41	50	45	41	39
9	62	50	43	38	61	50	42	38	49	42	37	47	41	37	47	41	37	35
10	59	47	39	34	57	46	39	34	45	39	34	44	38	34	43	38	34	32

NOTE: Floor Cavity Reflectance : 20%

ZONAL LUMEN SUMMARY		
Zone	Lumens	% of Fixture
0-20°	332.00	18.40
0-30°	689.94	38.30
0-40°	1095.66	60.90
0-60°	1664.57	92.50
0-80°	1786.51	99.20
0-90°	1797.12	99.80

LUMINANCE DATA (CANDELA/m²)			
Gamma	0°	45°	90°
45°	8251	8251	8251
55°	4433	4433	4433
65°	1645	1645	1645
75°	827	827	827
85°	263	263	263

POLAR GRAPH

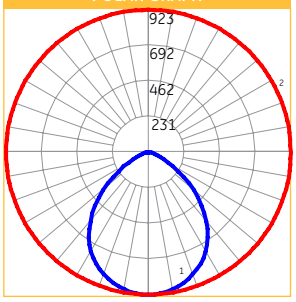

Accessories:

ACCESSORY	CATALOG #	SKU	NOTES
347V KIT	LRX347V277	93036250	347V TRANS FORMER QUICK CONNECT KIT
6" WHITE PAINTED GOOF RING	GRRC6RPTWT	93018829	RECOMMENDED FOR OVER -SIZED HOLES IN CEILING
8" WHITE PAINTED GOOF RING	GRRC8RPTWT	93018831	RECOMMENDED FOR OVER -SIZED HOLES IN CEILING
6" NEW CONSTRUCTION FRAME KIT	FRAME6R	93025091	RECOMMENDED FOR NEW CONSTRUCTION APPLICATIONS
8" NEW CONSTRUCTION FRAME KIT	FRAME8R	93025092	RECOMMENDED FOR NEW CONSTRUCTION APPLICATIONS
DAINTREE CONTROLS KIT	LCACBAVQTUNGALV	93038296	SEE DAINTREE ACCESSORY KIT LITERATURE & INSTALL MANUAL
ORGANIC RESPONSE CONTROLS KIT	LCACBAVQRUNGALV	93029452	SEE ORGANIC RESPONSE ACCESSORY KIT LITERATURE & INSTALL MANUAL
ENLIGHTED CONTROLS KIT	LCACBAVQNUNGALV	93029451	SEE ENLIGHTED ACCESSORY KIT LITERATURE & INSTALL MANUAL
EMERGENCY BATTERY BACKUP KIT (7W)	LRXEMBBKIT07	93043031	7 WATT EMBB QUICK CONNECT KIT (MUST HAVE FIXTURE WITH "EL" OPTION)
EMERGENCY BATTERY BACKUP KIT (10W)	LRXEMBBKIT10	93043540	10 WATT EMBB QUICK CONNECT KIT (MUST HAVE FIXTURE WITH "EL" OPTION)

Selectable Driver Package:

The LRX Series comes with a new Selectable Driver Package which allows customers to manually switch from full power (1000lm) to lower power (650lm) with just the switch of a button. This affords unprecedented flexibility for distributors to stock fewer SKUs. Reduces install risk by effectively having 2 lumen levels in 1 simple package.

*This feature is only available in the 1000/650lm package.

Product Specifications:

Construction:

- 16 gauge Aluminum spinning reflector housing, powder coating
- Custom engineered heat sink flange for passive cooling on all lumen options

Installation:

- Fixture mounting to an existing metal frame
- Conduit connect to quick-disconnect for easy installation

Optical System:

- Custom engineered reflectors for wide distributions.
- Semi-diffuse diffuser for ideal combination of optical efficiency and uniformity

Electrical System:

- High Efficiency, integrated driver with 0-10V dimming
- Selectable Lumen Driver available in the 1000/650lm package.

For more information and access to all of our resources, including our design tool visit: www.gelighting.com

Energi TriPak® Basic Packages

The Energi TriPak® Basic Package incorporates Maestro® load controls and wireless sensors which provides a system that delivers energy savings, convenience, and ease of installation.

Maestro Wireless® switches use Lutron® patented Clear Connect® RF Technology, which enables wireless communication with Radio Powr Savr™ sensors for light control.

Features

- The Energi TriPak® Basic package provides switching and occupancy/vacancy sensing of multiple load types.
- Lutron® patented Clear Connect® RF Technology works through walls and floors.
- Controls include Front Accessible Service Switch (FASS™) for safe lamp replacement.
- Two-wire installation for any retrofit application.
- Power failure memory: If power is interrupted, the control will return to its previously set level prior to interruption.

Model Numbers

MRF2-1S8A-1OC	(1) 8 A Switch (1) Radio Powr Savr™ ceiling sensor
MRF2-1S8A-1OH	(1) 8 A Switch (1) Radio Powr Savr™ hallway sensor
MRF2-1S8A-1OK	(1) 8 A Switch (1) Radio Powr Savr™ corner sensor
MRF2-1S8A-1OW	(1) 8 A Switch (1) Radio Powr Savr™ wall sensor
MRF2-1S8A-1VC	(1) 8 A Switch (1) Radio Powr Savr™ ceiling vacancy sensor
MRF2-2S8A-1OW	(2) 8 A Switches (1) Radio Powr Savr™ wall sensor

Receiving Devices

Maestro Wireless® Control

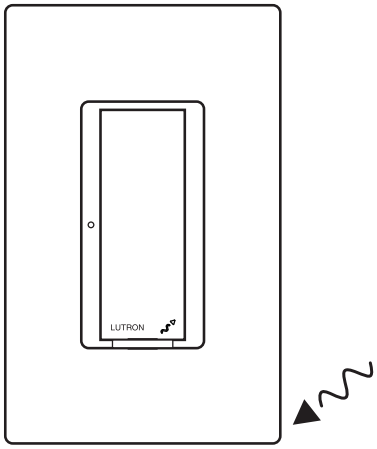

RF Switch

Transmitting Devices

Radio Powr Savr™ Sensors

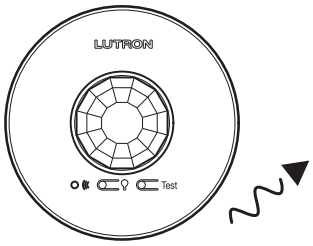

Ceiling-Mounted Occupancy and Vacancy Sensor

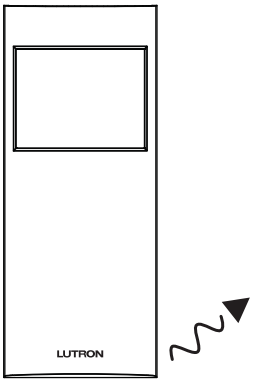

Wall, Corner, or Hall Mounted Occupancy and Vacancy Sensor

Maestro Wireless® Switch

Model Number

Switch

Lighting and motor loads

MRF2-8S-DV-XX	8 A Lighting, 3 A Fan (1/10 HP motor, 120 V~ only), Spec Grade Electronic Switch 120–277 V~, NO NEUTRAL WIRE REQUIRED

Companion Controls

Claro® Gloss Finishes

MA-AS-XX	Companion Switch 120 V~
MA-AS-277-XX	Companion Switch 277 V~

Satin Colors® Satin Finishes

MSC-AS-XX	Companion Switch 120 V~
MSC-AS-277-XX	Companion Switch 277 V~

"XX" in the model number represents color/finish code.

Switch

MRF2-8S-DV-XX

Companion Switch

MA-AS-XX

Switch Load Type and Capacity

No Neutral Required

Control	Voltage	Load Type	Minimum Load	Maximum Load		
				Not Ganged	End of Gang	Middle of Gang
MRF2-8S-DV[1,2]	120–277 V~	Incandescent/ Halogen	25 W	8 A	8 A/7 A[3]	7 A
	120–277 V~	Fluorescent/ LED/CFL	40 W (LUT-MLC)[4]	8 A	8 A/7 A[3]	7 A
	120 V~	Fan Motor	0.4 A	1/10 HP 3 A	1/10 HP 3 A	1/10 HP 3 A

1 Switch Load Type: MRF2-8S-DV is designed for use with permanently installed lighting loads and with fan motor loads up to 1/10 HP (3 A, 120 V~ only).
2 Switch Load Type: MRF2-8S-DV are designed for use with permanently installed lighting loads.
3 Maximum load for double gang application is 8 A. Triple gang application derates maximum load to 7 A.
4 The LUT-MLC (included) ensures proper function with certain fluorescent, CFL, and LED load types.

Specifications

Regulatory Approvals

- UL® Listed.
- CSA Certified.
- FCC Approved. Complies with the limits for a Class B digital device, pursuant to Part 15 of the FCC Rules.
- Industry Canada Certified.

Power

Operating voltage:
120 – 277 V∼ 50/60 Hz

Key Design Features

Switch

- On a single-tap, lights turn ON or OFF.

All RF Local Controls

- Tested to withstand electrostatic discharge without damage or memory loss, in accordance with IEC 61000-4-2.
- Tested to withstand surge voltages without damage or loss of operation, in accordance with IEEE C62.41-1991 Recommended Practice on Surge Voltages in Low-Voltage AC Power Circuits.
- Controls always operate locally and do not require system control.
- Power failure memory: should power be interrupted, the control will return to its previously set level prior to the interruption when power is restored.
- Uses conventional Single-pole, 3-way and 4-way wiring.
- Multiple location control from Switch and up to 9 Companion Switches.
- Use Lutron® Designer (Claro® and Satin Colors®) wallplates or designer-style wallplates from other manufacturers. Wallplates are sold separately.
- Lutron Claro® and Satin Colors® wallplates snap on with no visible means of attachment.
- Requires a 1-gang U.S. wallbox. 3½ in (89 mm) deep recommended, 2¼ in (57 mm) deep minimum.
- Green indicator light.

System Communications and Capacity

- Maestro Wireless® controls communicate with the Pico® wireless controls and Radio Power Savr™ sensors through radio frequency (RF).
- Maestro Wireless® local controls must be located within 60 ft (18 m) line of sight or 30 ft (9 m) through walls, of Radio Power Savr™ sensors.
- Maestro Wireless® local controls must be located within 60 ft (18 m) line of sight or 30 ft (9 m) through walls, of a Pico® wireless control.
- Up to 10 sensors or Pico® wireless controls can be assigned to each switch.
- Sensors can be assigned to multiple switches.

Environment

- Ambient operating temperature: 32 °F to 104 °F (0 °C to 40 °C), 0%-90% humidity, non-condensing. Indoor use only.

Operation

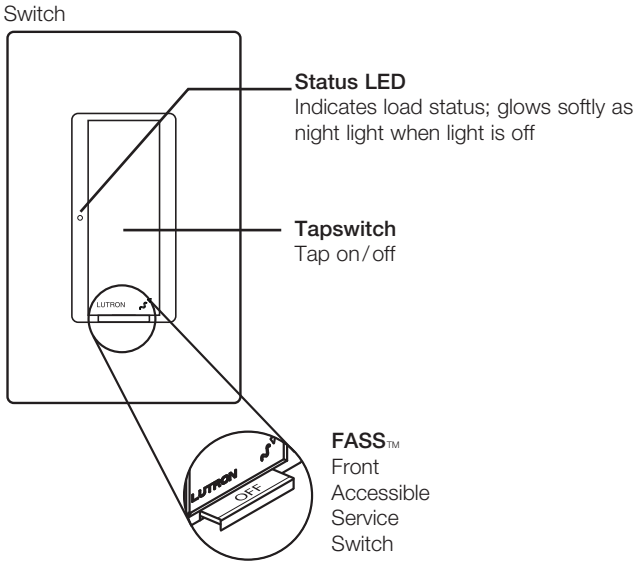

Mounting

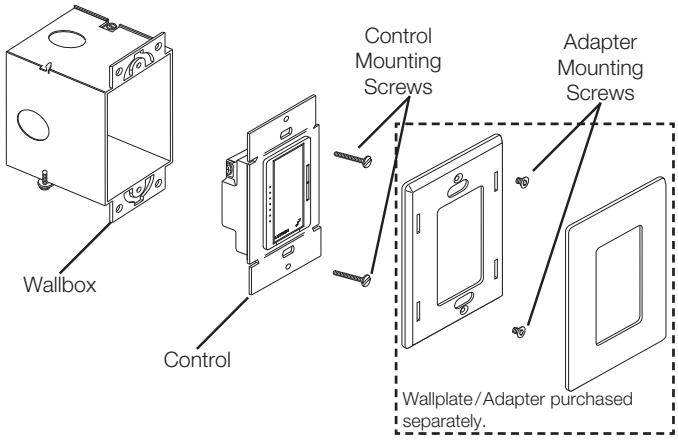

IMPORTANT NOTICE:
FASS™ - Front Accessible Service Switch - to service load, remove power by pulling the FASS™ switch out completely on either the Switch or Companion Switch. After servicing load, push the FASS™ switch back in fully to restore power to the control.

Dimensions

Front View

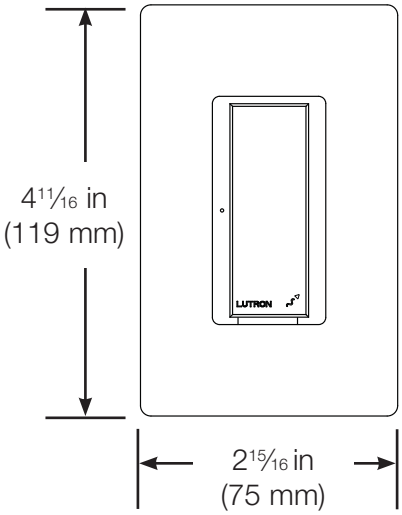

Side View

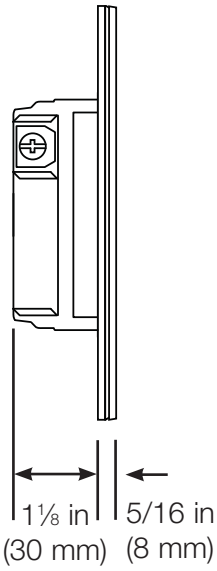

Wiring Diagrams

Single Location Installation

MRF2-8S-DV

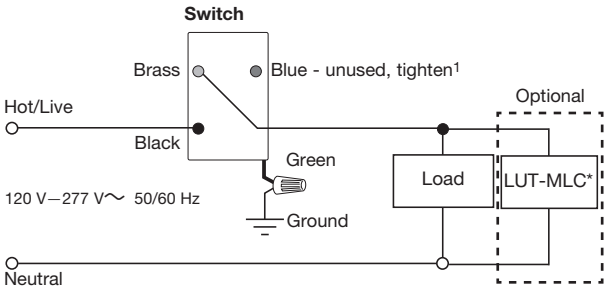

* A LUT-MLC ensures proper function when fluorescent, CFL, or LED loads are used. Install the LUT-MLC inside a load fixture or in a separate J-box of the circuit.

Multi-Location Installation[2]

MRF2-8S-DV[3] with MA-AS/MA-AS-277 or MSC-AS/MSC-AS-277

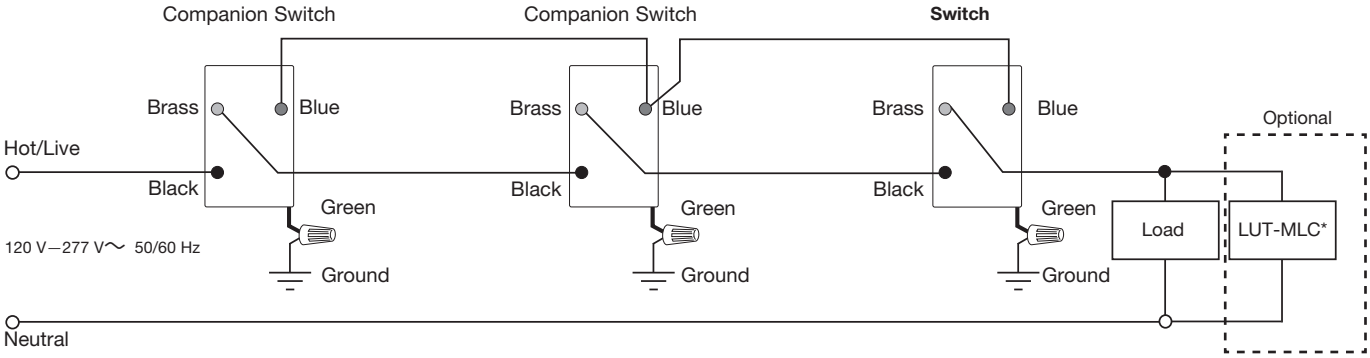

[1] When using controls in single location installations, tighten the blue terminal without any wires attached. **DO NOT** connect the blue terminal to any other wiring or to ground.

[2] Up to 9 Maestro® Companion Switches may be connected to the Maestro Wireless® Switch. Total blue terminal wire length may be up to 250 ft (76 m).

[3] Requires MA-AS/MSC-AS for 120 V~ applications, and MA-AS-277/MSC-AS-277 for 277 V~ applications.

Colors and Finishes

Gloss Finishes

White
WH

Ivory
IV

Almond
AL

Light Almond
LA

Gray
GR

Brown
BR

Black
BL

Due to printing limitations, colors and finishes shown cannot be guaranteed to perfectly match actual product colors.

Satin Finishes

Hot
HT

Merlot
MR

Plum
PL

Turquoise
TQ

Taupe
TP

Eggshell
ES

Biscuit
BI

Snow
SW

Palladium
PD

Midnight
MN

Sienna
SI

Terracotta
TC

Greenbriar
GB

Bluestone
BG

Mocha Stone
MS

Goldstone
GS

Desert Stone
DS

Stone
ST

Limestone
LS

Metal Finish (wallplate only)

Stainless Steel
SS

When using Stainless Steel wallplates, it is recommended to order the controls in Black (BL) or Midnight (MN).

Radio Powr Savr™ Wireless Occupancy/Vacancy Ceiling Sensor

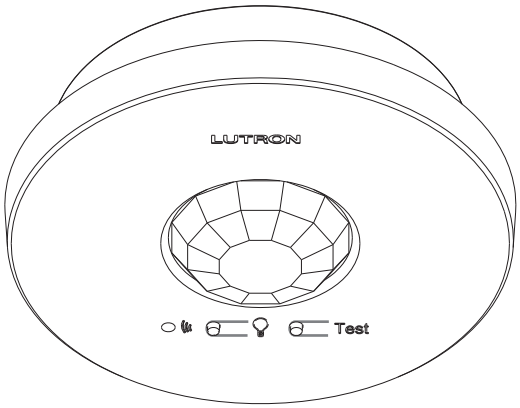

Lutron® Radio Powr Savr™ occupancy/vacancy sensors are wireless, battery-powered passive infrared (PIR) sensors that automatically control lights via RF communication to compatible dimming and switching devices. These sensors detect the heat from people moving within an area to determine when the space is occupied. The sensors then wirelessly transmit the appropriate commands to the associated dimming and switching devices to turn the lights on or off automatically. They combine both convenience and exceptional energy savings potential along with ease of installation.

Features

- Wireless occupancy sensor has 3 settings available: Auto-On/Auto-Off, Auto-On Low-Light/Auto-Off, and Manual-On/Auto-Off
- Auto-On Low-Light feature will only turn lights on automatically if there is less than approximately 10 Lux (1 fc) of ambient light
- Vacancy only model available to meet California (U.S.A.) Title 24 requirements
- Uses Clear Connect® technology
- Passive infrared motion detection with exclusive Lutron® XCT™ Technology for fine motion detection
- 360˚ coverage ranges from 324 ft^2 (30.2 m^2) to 676 ft^2 (62.4 m^2), depending on mounting height. See range diagrams for more details.
- Simple and intuitive adjustments available for Timeout, Auto-On, and Activity settings
- Supports advanced occupancy features, such as dependent occupancy groups and customizable occupied/unoccupied presets in some systems
- Multiple sensors can be added for extended coverage—refer to product specification submittal of receiving device to determine system limits
- Lens illuminates during test mode to verify ideal locations
- Multiple ceiling-mount methods available for different ceiling materials
- Front accessible test buttons make programming easy
- 10-year battery life design
- RoHS compliant

Job Name:	Model Numbers:	
Job Number:		

Specifications

Regulatory

- Lutron® Quality Systems Registered to ISO 9001:2008

Standards Approved

- FCC certified
- IC certified
- Meets CA (U.S.A.) Energy Commission Title 24 requirements
- COFETEL
- ANATEL
- SUTEL

Power/Performance

- Operating voltage: 3 V⎓
- Operating current: 14 µA nominal
- Requires one CR 123 lithium battery
- 10-year battery life
- Non-volatile memory (saved changes are stored during power loss)

Environment

- Temperature: 32 ˚F to 104 ˚F (0 ˚C to 40 ˚C)
- For indoor use only

Range

Local load controls must be located within 60 ft (18 m) line of sight, or 30 ft (9 m), through walls, of a sensor.

Sensor Coverage Test

- Front accessible test button
- Lens illuminates orange in response to motion during test mode and is visible from 60 ft (18 m)

Wireless Communication Test

- Front accessible test button
- Turn associated loads on and off

Timeout Options

- 1 minute *
- 5 minutes
- 15 minutes – default setting
- 30 minutes

Auto-On Options (Occupancy Versions Only)

- "Enabled" – Sensor turns lights ON and OFF automatically – default setting.
- "Low Light" – Sensor turns lights ON automatically only in low ambient light conditions. Sensor turns lights OFF automatically.
- "Disabled" ** – Lights must be turned ON manually from dimming or switching device. Sensor turns lights OFF automatically.

Activity Options

- Low Activity – default setting
- Medium Activity
- High Activity

* Intended for use in high-activity, briefly occupied areas only

** There is a 15-second grace period that begins when the lights are automatically turned off, during which the lights will automatically turn back on in response to motion. This grace period is provided as a safety and convenience feature in the event the lights turn off while the room is still occupied, so that the user does not need to manually turn the lights back on. After 15 seconds, the grace period expires and the lights must be manually turned on.

Installation Overview

Sensor Setup

- Sensor setup is available as a service by Lutron. For more information see the **Sensor Layout and Tuning** service document (Lutron® P/N 3601235).

Sensor Placement

- The ability of the sensor to detect motion requires line of sight of room occupants. The sensor must have an unobstructed view of the room. **DO NOT** mount behind or near tall cabinets, shelves, hanging fixtures, ceiling fans, etc. The sensor cannot see through glass objects such as patio or shower doors.
- Hot objects and moving air currents can affect the performance of the sensor. To ensure proper operation, the sensor should be mounted at least 4 ft (1.2 m) away from HVAC vents and light bulbs that are below the ceiling line.
- The performance of the sensor depends on a temperature differential between the ambient room temperature and that of room occupants. Warmer rooms may reduce the ability of the sensor to detect occupants.

Mounting

Temporary mounting is optional to test sensor coverage and wireless communication before permanently installing the sensor.

Drop Ceiling (Compressed Fiber Ceiling Tile)

The mounting wire is provided for both temporary and permanent mounting of the sensor to ceiling tiles. It is designed to allow temporary mounting, testing, and repositioning (if necessary) of the sensor without damaging a ceiling tile. Once the final position of the sensor has been chosen, the mounting wire should be twisted together to permanently secure the sensor in place.

Solid Ceiling (Drywall, Plaster, Concrete, or Wood)

- Temporary mounting: Ten (10) temporary mounting strips can be purchased in the kit L-CMDPIRKIT for temporarily mounting and testing the sensor.
- Permanent mounting: Screws and anchors (for drywall or plaster) provided to mount the sensor.

Recess Mount

- Do not recess mount sensor in a metal surface.
- Recess mounting ring requires an opening of 3 in (76 mm) in diameter.
- Recess mounting ring secures internally to ceiling. Sensor twists into the recess mounting ring and sits flush with ceiling (see image to right).
- Recess mounting ring purchased as a separate kit: L-CRMK-WH.

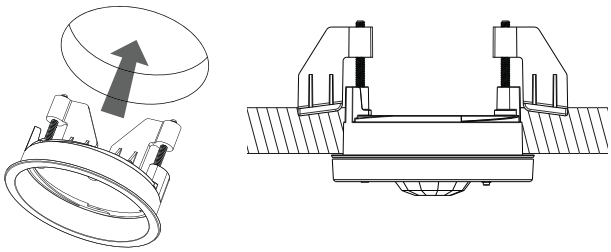

Dimensions

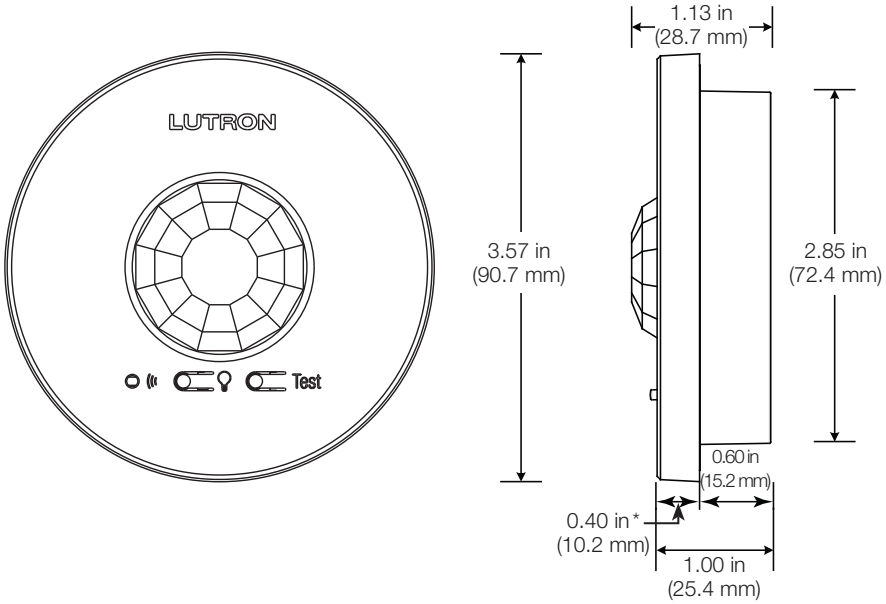

* With the recess mounting kit 0.46 (11.7 mm) is below the plane of the ceiling.

Range Diagrams

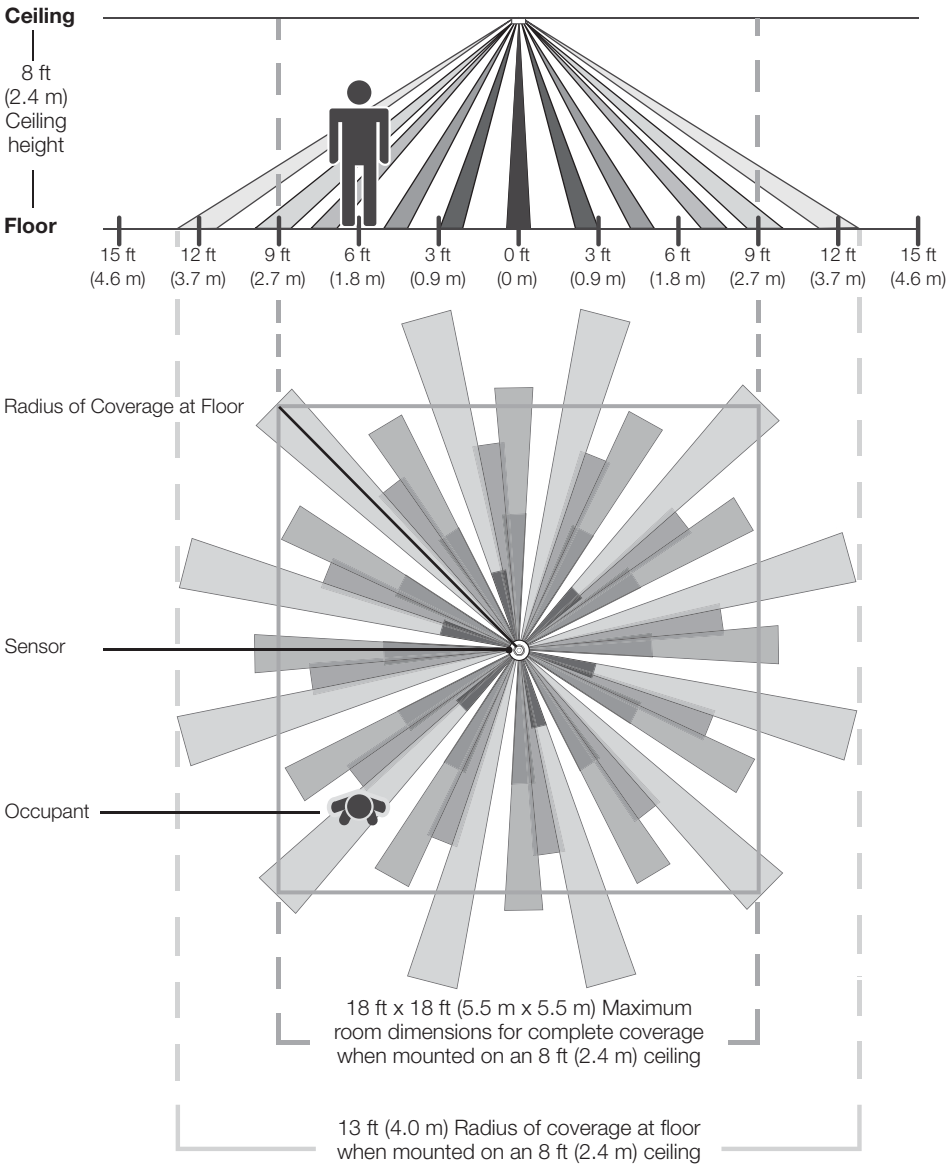

Sensor Coverage Chart (for sensor mounted in center of room)

Ceiling Height	Maximum Room Dimensions for Complete Floor Coverage*	
8 ft (2.4 m)	18 ft x 18 ft (5.5 m × 5.5 m)	324 ft^2 (30.2 m^2)
9 ft (2.7 m)	20 ft x 20 ft (6.1 m × 6.1 m)	400 ft^2 (37.2 m^2)
10 ft (3.0 m)	22 ft x 22 ft (6.7 m × 6.7 m)	484 ft^2 (44.9 m^2)
12 ft (3.7 m)	26 ft x 26 ft (7.9 m × 7.9 m)	676 ft^2 (62.4 m^2)

* 12 ft (3.7 m) is the recommended maximum mounting height

Lens Masking

Whenever possible, the sensor should be installed in a location where it cannot view areas outside the intended space, such as hallways or adjacent rooms. If this situation cannot be avoided, portions of the lens may be masked to block the view of the sensor into undesired areas. Ten (10) PIR Lens Masks can be purchased in the kit L-CMDPIRKIT.

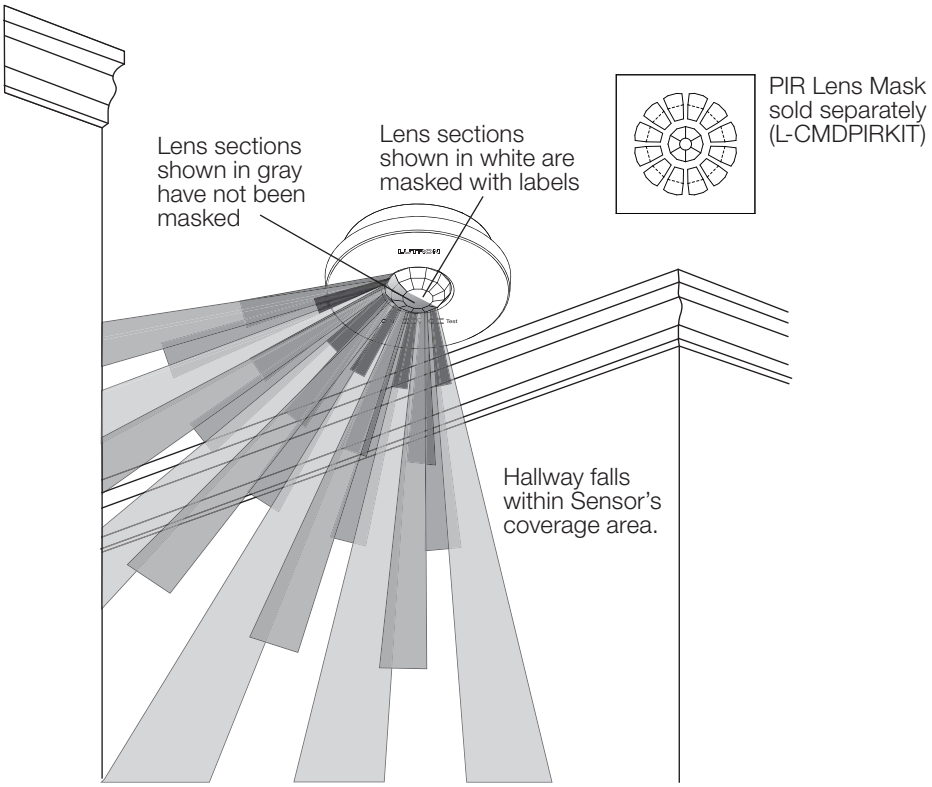

Wireless Wall-Mount Sensor

Lutron® wall-mounted occupancy and vacancy sensors are wireless battery-powered passive infrared (PIR) sensors that automatically control lights via RF communication to compatible dimming or switching devices. These sensors detect the heat from people moving within an area to determine when the space is occupied. The sensors then wirelessly transmit the appropriate commands to the associated dimming or switching devices to turn the lights on or off automatically. They combine both convenience and exceptional energy savings along with ease of installation.

Features

- Wireless occupancy/vacancy sensor has 2 settings available: Auto-On/Auto-Off, and Manual-On/Auto-Off
- Vacancy model meets California Title 24 requirements
- Passive infrared motion detection with exclusive Lutron® XCT™ Technology for fine motion detection
- 180˚ field of view model:
  Minor motion = 1500 ft^2 (139.4 m^2)
  Major motion = 3000 ft^2 (278.7 m^2)
- 90˚ field of view model:
  Minor motion = 1225 ft^2 (113.8 m^2)
  Major motion = 2500 ft^2 (232.3 m^2)
- Hallway model with long, narrow field of view:
  Major motion = coverage of up to 150 ft (45.7 m)
- Simple and intuitive adjustments available for Timeout, Activity, and Auto-On settings
- Accessible test buttons make setup easy
- Lens illuminates during test mode to verify ideal locations
- Multiple sensors can be added for extended coverage—refer to product specification submittal of receiving device to determine system limits
- 10-year battery life design
- RoHS compliant

Compatible RF Devices

- For use with Lutron® products only
- Communicates to various wireless Lutron® Clear Connect® systems*

* *Contact Lutron Customer Service at www.lutron.com for frequency/channel code compatibility with your particular geographic region, and for integrating with other Lutron® lighting and shading products.*

Job Name:	Model Numbers:	
Job Number:		

Specifications

Regulatory

- Lutron Quality Systems Registered to ISO 9001:2008

Regulatory Approvals

- cULus Listed
- FCC certified
- IC certified
- COFETEL certified
- ANATEL certified
- SUTEL certified
- Meets CA (U.S.A.) Energy Commission Title 24 requirements

Power/Performance

- Operating voltage: 3 V ⎓
- Operating current: 14 µA nominal
- Requires one CR 123 lithium battery
- 10-year battery life design
- Non-volatile memory (saved changes are stored during power loss)

Environment

- Temperature: 32 ˚F to 104 ˚F (0 ˚C to 40 ˚C)
- For indoor use only

RF Range

Distance between local load controls and sensor should not exceed 60 ft (18 m) line of sight or 30 ft (9 m) through walls.

Sensor Coverage Test

- Dedicated test button
- Lens illuminates orange in response to motion during test mode

Wireless Communication Test

- Dedicated test button
- Turn associated loads on and off

Timeout Options

- 1 minute *
- 5 minutes
- 15 minutes – default setting
- 30 minutes

Auto-On Options (Occupancy Versions Only)

- “Enabled” – Sensor turns lights ON and OFF automatically – default setting.
- “Disabled” ** – Lights must be turned ON manually from dimming or switching device. Sensor turns lights OFF automatically.

Sensitivity Options

- Low Activity (🚶) – default setting
- Medium Activity (🚶)
- High Activity (🚶)

* Intended for use in high-activity, briefly occupied areas only

** There is a 15-second grace period that begins when the lights are automatically turned off, during which the lights will automatically turn back on in response to motion. This grace period is provided as a safety and convenience feature in the event the lights turn off while the room is still occupied, so that the user does not need to manually turn the lights back on. After 15 seconds, the grace period expires and the lights must be manually turned on.

Dimensions

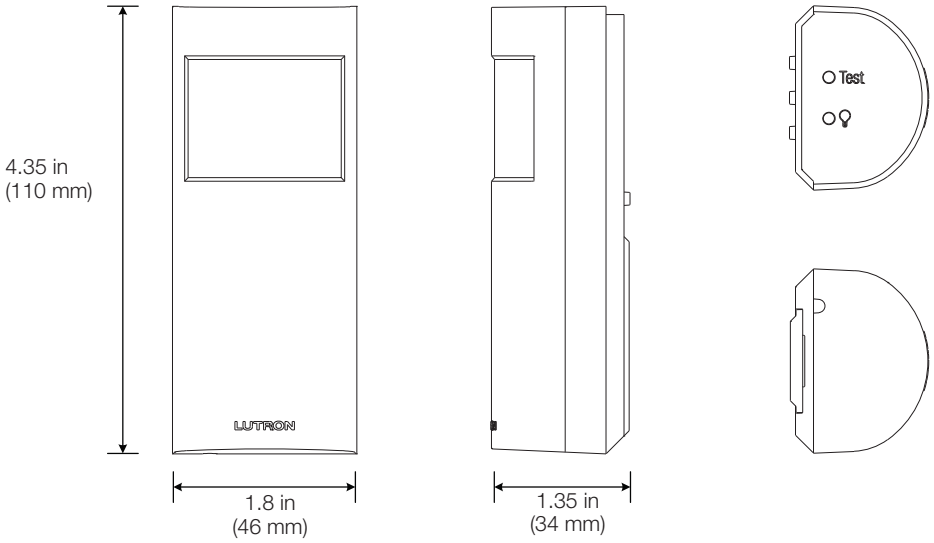

Coverage Diagrams

180° Wall-Mount Sensors

(Models: LRFX-OWLB-P-WH and LRFX-VWLB-P-WH)

Horizontal Beam Diagram

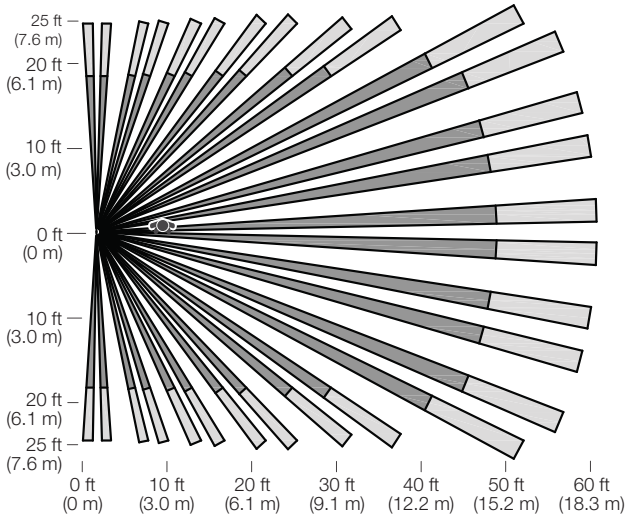

Vertical Beam Diagram*

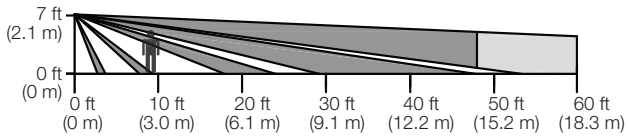

Tested Coverage Area

Major Motion 3000 ft² (278.7 m²) coverage

Minor Motion 1500 ft² (139.4 m²) coverage

Compliant to NEMA WD7 test grid shown below

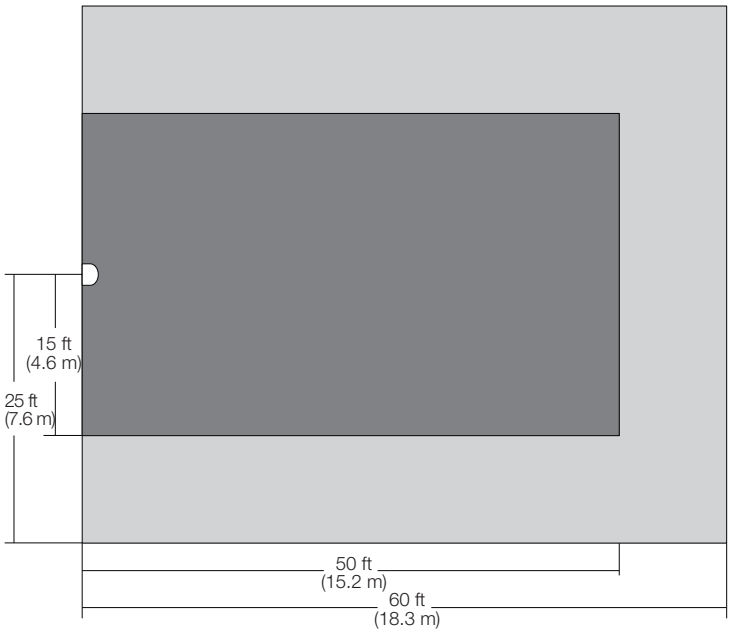

* Sensor mounting shown at 7 ft (2.1 m). Mounting height should be between 6 ft and 8 ft (1.6 m and 2.4 m).

Coverage Diagrams

90° Corner-Mount Sensors

(Models: LRFX-OKLB-P-WH and LRFX-VKLB-P-WH)

Horizontal Beam Diagram

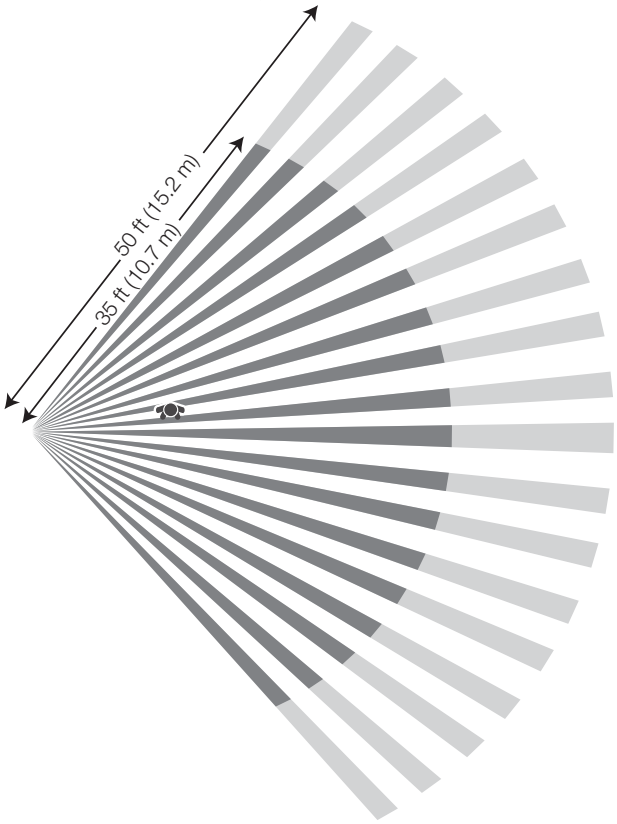

Vertical Beam Diagram*

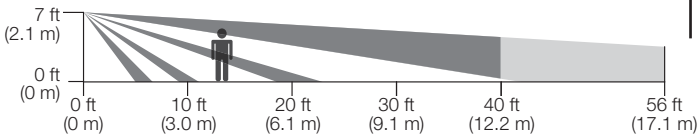

Tested Coverage Area

Major Motion 2500 ft² (232.3 m²) coverage

Minor Motion 1225 ft² (113.8 m²) coverage

Compliant to NEMA WD7 test grid shown below

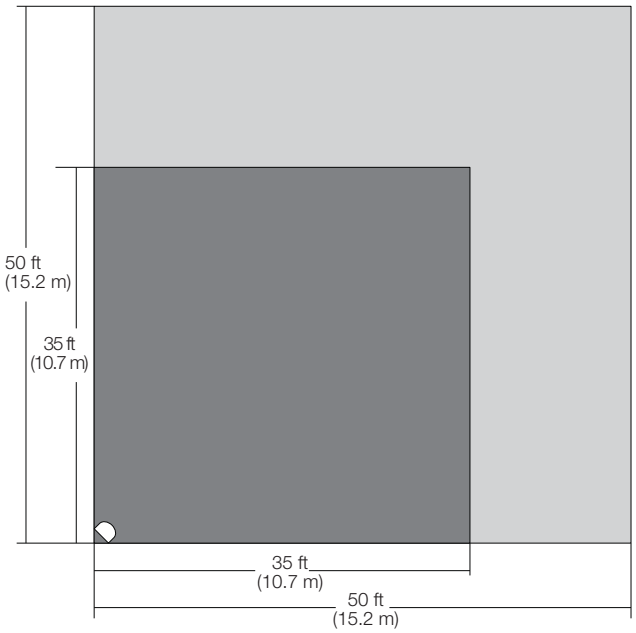

* Sensor mounting shown at 7 ft (2.1 m). Mounting height should be between 6 ft and 8 ft (1.6 m and 2.4 m).

Coverage Diagrams

Hallway Sensors

(Models: LRFX-OHLB-P-WH and LRFX-VHLB-P-WH)

Maximum Recommended Hallway Length

Width of Hall	Length of Hall
6 ft (1.8 m) or less	50 ft (15.2 m)
8 ft (2.4 m)	100 ft (30.5 m)
10 ft (3.0 m) or more	150 ft (45.7 m)

Top View

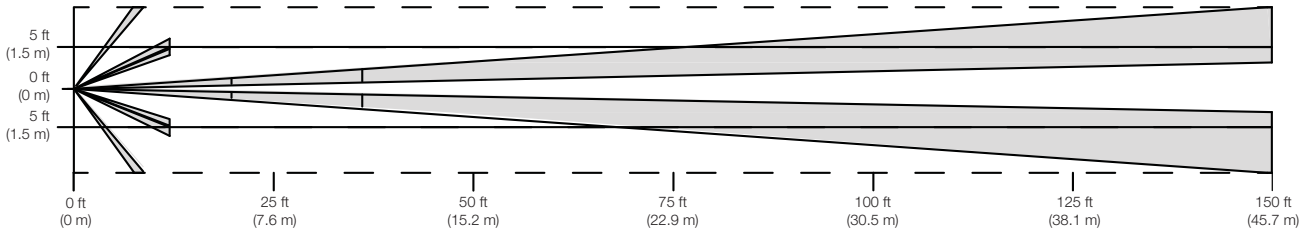

Side View

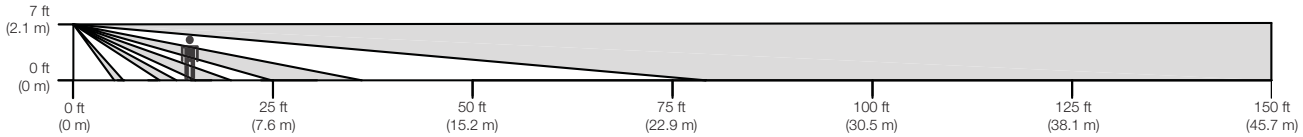

* Sensor mounting shown at 7 ft (2.1 m). Mounting height should be between 6 ft and 8 ft (1.8 m and 2.4 m) and centered within hallway.

- Designed to mount at the end of a hallway with a clear view down the length of a hall.
- Detection at longer distances is best when motion occurs at right angles to the sensor.
- Multiple sensors can be used to extend coverage.

Installation Overview

Sensor Placement

- The mounting height of the sensor should be between 6 ft and 8 ft (1.6 m and 2.4 m)
- For smaller rooms less than 12 ft x 12 ft (3.7 m x 3.7 m), detection may be improved by mounting the sensor at 6 ft (1.8 m) from the floor.
- The ability to detect motion requires that the sensor have line-of-sight of all room occupants. The sensor must have an unobstructed view of the room. **DO NOT** mount behind or near tall cabinets, shelves, hanging fixtures, etc. The sensor cannot detect occupants through glass objects such as patio or shower doors.
- Hot objects and moving air currents can affect the performance of the sensor. To ensure proper operation, the sensor should be mounted at least 4 ft (1.2 m) away from light bulbs and HVAC vents.
- The performance of the sensor depends on a temperature differential between the ambient room temperature and that of room occupants. Warmer rooms may reduce the sensor's ability to detect occupants.
- Distance between local load controls and sensor should not exceed 60 ft (18 m) line of sight or 30 ft (9 m) through walls.

Mounting

- 180˚ and hallway sensors mount directly to wall with mounting bracket (included). See figure below.
- 90˚ sensors mount directly in corner or on wall offset away from corner with mounting bracket (included). See figure below.
- Temporary mounting is recommended to test sensor coverage and wireless communication before permanently installing the sensor.
  - Temporary mounting: A 3M™ Command™ adhesive strip is provided for temporarily mounting and testing the sensor. This strip is designed for easy, damage-free removal and is not reusable.
  - Permanent mounting: Mounting bracket, screws and anchors are provided to mount sensor.
  - Flexible Armature Mounting Kit - P/N LRF2-MTG-KIT-CPN5991 (sold separately): A flexible sensor mounting bracket which allows sensor to be mounted at right angles and at greater heights to increas coverage area.

180˚ Wall-Mount Sensor & Hallway Sensor

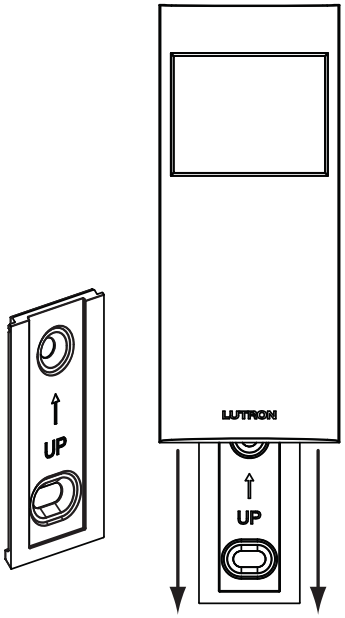

90˚ Corner-Mount Sensor

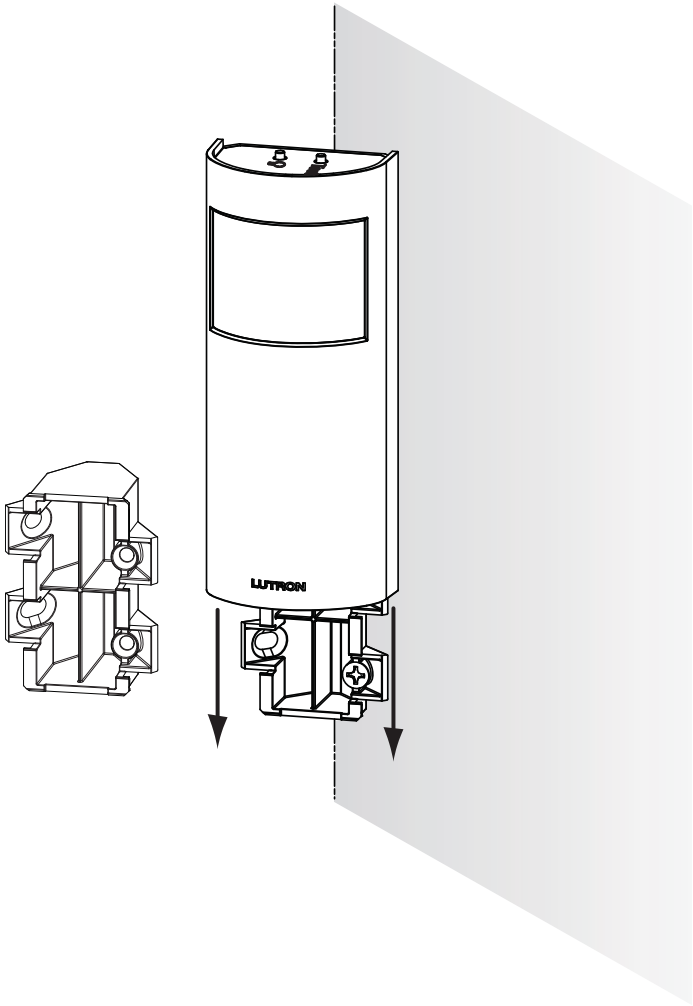

3M and Command are trademarks of 3M Company.

Job Name:	Model Numbers:	
Job Number:		

PHILIPS

LED

InstantFit lamps

This is **real compatibility**

Other lamps claim compatibility, but only InstantFit has been proven to work with 50% more ballasts[1] delivering even light output, proven energy savings and a long average lifetime. That's true compatibility.

- **InstantFit works with over 200 ballasts —** more than any other lamp — so you know it's going to perform as expected and keep you from having to redo any jobs
- **Proven over 40% energy savings**[2] over fluorescent means a satisfied customer and no time wasted going back to a job
- **Lifetime delivered —** average life rating of 50,000 hours[3], with up to 70,000[3] in the portfolio, means satisfied customers
- **Improved profit** and more time growing business instead of doing rework
- **Light quality and performance predictability—** consistent light output and no flicker means satisfied happy customers and no wasted time redoing a job.
- **Proven product history** and a company with a long history of innovation and reliability in the lighting industry.

See footnotes on last page.

Philips InstantFit LED lamps

Philips InstantFit LED T8 lamps

Ordering, electrical and technical data (Subject to change without notice)

Product Number	Model Number	DLC Product ID[8]	Ordering Code	Volts (Depending on Ballast)	Base	CRI	Color Temp. (K)	Pkg Qty	LED Lifetime[4]	MOL (In.)	Beam Angle
InstantFit LED T8 - 4'											
46826-4	9290011239C	Not DLC Certified	10T8/48-3000 IF 10/1	120-277, 347	G13	82	3000	10	50,000	48	160°
46827-2	9290011240C	PCY5A5J7	10T8/48-3500 IF 10/1	120-277, 347	G13	82	3500	10	50,000	48	160°
46828-0	9290011241C	PES681F4	10T8/48-4000 IF 10/1	120-277, 347	G13	82	4000	10	50,000	48	160°
46829-8	9290011242C	P1CQAFXR	10T8/48-5000 IF 10/1	120-277, 347	G13	82	5000	10	50,000	48	160°
• 46956-9	9290011239C	Not DLC Certified	10T8/48-3000 IF 10/1 TAA/NAFTA	120-277, 347	G13	82	3000	10	50,000	48	160°
• 46957-7	9290011240C	PCY5A5J7	10T8/48-3500 IF 10/1 TAA/NAFTA	120-277, 347	G13	82	3500	10	50,000	48	160°
• 46958-5	9290011241C	PES681F4	10T8/48-4000 IF 10/1 TAA/NAFTA	120-277, 347	G13	82	4000	10	50,000	48	160°
• 46959-3	9290011242C	P1CQAFXR	10T8/48-5000 IF 10/1 TAA/NAFTA	120-277, 347	G13	82	5000	10	50,000	48	160°
InstantFit LED T8 - 4' dimmable high output											
46830-6	9290011585C	P1GG4T6Q	14T8/48-3000 IF 10/1 DIM	120-277, 347	G13	82	3000	10	50,000	48	160°
46831-4	9290011586C	P5R4PGPD	14T8/48-3500 IF 10/1 DIM	120-277, 347	G13	82	3500	10	50,000	48	160°
46832-2	9290011587C	PFWPMJNV	14T8/48-4000 IF 10/1 DIM	120-277, 347	G13	82	4000	10	50,000	48	160°
46833-0	9290011588C	P9RG41WJ	14T8/48-5000 IF 10/1 DIM	120-277, 347	G13	82	5000	10	50,000	48	160°
• 46960-1	9290011585C	P1GG4T6Q	14T8/48-3000 IF 10/1 DIM TAA/NAFTA	120-277, 347	G13	82	3000	10	50,000	48	160°
• 46961-9	9290011586C	P5R4PGPD	14T8/48-3500 IF 10/1 DIM TAA/NAFTA	120-277, 347	G13	82	3500	10	50,000	48	160°
• 46962-7	9290011587C	PFWPMJNV	14T8/48-4000 IF 10/1 DIM TAA/NAFTA	120-277, 347	G13	82	4000	10	50,000	48	160°
• 46963-5	9290011588C	P9RG41WJ	14T8/48-5000 IF 10/1 DIM TAA/NAFTA	120-277, 347	G13	82	5000	10	50,000	48	160°
InstantFit LED T8 - 4' high output glass											
47009-6	9290013430	Pending	14T8 PRO LED/48-3000 IF G 10/1	120-277, 347	G13	82	3000	10	50,000	48	240°
47010-4	9290013431	PV2NCR1M	14T8 PRO LED/48-3500 IF G 10/1	120-277, 347	G13	82	3500	10	50,000	48	240°
47011-2	9290013432	PUQ8ZEAH	14T8 PRO LED/48-4000 IF G 10/1	120-277, 347	G13	82	4000	10	50,000	48	240°
47012-0	9290013433	P8HU6SVS	14T8 PRO LED/48-5000 IF G 10/1	120-277, 347	G13	82	5000	10	50,000	48	240°
InstantFit LED T8 - 4' ultra high output											
46313-3	9290012267	PNGUXZUY	16.5T8 LED/48-3500 IF 10/1 UHO	120-277, 347	G13	82	3500	10	70,000	48	160°
46314-1	9290012268	PZ5C8FWR	16.5T8 LED/48-4000 IF 10/1 UHO	120-277, 347	G13	82	4000	10	70,000	48	160°
46315-8	9290012269	PS8REP3K	16.5T8 LED/48-5000 IF 10/1 UHO	120-277, 347	G13	82	5000	10	70,000	48	160°
InstantFit LED T8 - 4'glass											
45656-6	9290011511	Not DLC Certified	17T8/48-4000 IFG 10/1	120-277, 347	G13	82	4000	10	36,000	48	240°
45657-4	9290011512	Not DLC Certified	17T8/48-5000 IFG 10/1	120-277, 347	G13	82	5000	10	36,000	48	240°
InstantFit LED T8 - 3'											
46932-0	9290013113	No DLC Category	9T8 LED/36-3000 IF 10/1	120-277, 347	G13	82	3000	10	50,000	36	160°
46933-8	9290013114	No DLC Category	9T8 LED/36-3500 IF 10/1	120-277, 347	G13	82	3500	10	50,000	36	160°
46934-6	9290013115	No DLC Category	9T8 LED/36-4000 IF 10/1	120-277, 347	G13	82	4000	10	50,000	36	160°
46935-3	9290013116	No DLC Category	9T8 LED/36-5000 IF 10/1	120-277, 347	G13	82	5000	10	50,000	36	160°
InstantFit LED T8 - 2' high output											
46927-0	9290013108	Not DLC Certified	7T8 LED/24-3000 IF 10/1	120-277, 347	G13	82	3000	10	50,000	24	160°
46928-8	9290013109	PM745MKV	7T8 LED/24-3500 IF 10/1	120-277, 347	G13	82	3500	10	50,000	24	160°
46929-6	9290013110	PKTG4YER	7T8 LED/24-4000 IF 10/1	120-277, 347	G13	82	4000	10	50,000	24	160°
46930-4	9290013111	PW99TC5B	7T8 LED/24-5000 IF 10/1	120-277, 347	G13	82	5000	10	50,000	24	160°
InstantFit LED T8/T12 - 8'											
46923-9	9290013077	No DLC Category	35T8/96-3000 IF FA8 10/1	120-277, 347	FA8	82	3000	10	50,000	96	160°
46924-7	9290013078	No DLC Category	35T8/96-3500 IF FA8 10/1	120-277, 347	FA8	82	3500	10	50,000	96	160°
46925-4	9290013146	No DLC Category	35T8/96-4000 IF FA8 10/1	120-277, 347	FA8	82	4000	10	50,000	96	160°
46926-2	9290013147	No DLC Category	35T8/96-6500 IF FA8 10/1	120-277, 347	FA8	82	6500	10	50,000	96	160°
InstantFit LED T5 high output											
46712-6	9290012837	Not DLC Certified	24T5 LED/HO/48-3000 IF 10/1	120-277, 347-480V	G5	82	3000	10	50,000	46	160°
46713-4	9290012838	PR7H998W	24T5 LED/HO/48-3500 IF 10/1	120-277, 347-480V	G5	82	3500	10	50,000	46	160°
46714-2	9290012839	PUFNVUMP	24T5 LED/HO/48-4000 IF 10/1	120-277, 347-480V	G5	82	4000	10	50,000	46	160°
46715-9	9290012840	PJHYX3QV	24T5 LED/HO/48-5000 IF 10/1	120-277, 347-480V	G5	82	5000	10	50,000	46	160°
InstantFit LED T8 U-Bent - 6" high output											
46937-9	9290013118	PTESWFZT	13T8 LED/24-3000 IF-6U 10/1	120-277, 347	G13	82	3000	10	50,000	24	160°
46938-7	9290013119	P14MK6P7	13T8 LED/24-3500 IF-6U 10/1	120-277, 347	G13	82	3500	10	50,000	24	160°
46939-5	9290013120	P3WDMMYN	13T8 LED/24-4000 IF-6U 10/1	120-277, 347	G13	82	4000	10	50,000	24	160°
46940-3	9290013121	PSR46S6R	13T8 LED/24-5000 IF-6U 10/1	120-277, 347	G13	82	5000	10	50,000	24	160°
LED InstantFit - 4' rotatable high output											
46865-2	9290013033	P1Z3VUZP	14T8/48-3000 IF 10/1 ROT	120-277, 347	G13	82	3000	10	50,000	48	160°
46866-0	9290013034	PMRXKRUT	14T8/48-3500 IF 10/1 ROT	120-277, 347	G13	82	3500	10	50,000	48	160°
46867-8	9290013035	P2R73QWZ	14T8/48-4000 IF 10/1 ROT	120-277, 347	G13	82	4000	10	50,000	48	160°
46868-6	9290013036	PQ2TMYAQ	14T8/48-5000 IF 10/1 ROT	120-277, 347	G13	82	5000	10	50,000	48	160°

Please refer to www.philips.com/instantfit for instant start ballasts details and the latest ballast compatibility guide[5].

For more information on Philips' limited warranty please visit www.philips.com/warranties.

See footnotes on last page.

Philips InstantFit LED lamps

Philips InstantFit LED T8 lamps

Ballast technical data (Subject to change without notice)

Product Number	Bare Lamp Watts (W)	Average System Watts (W)			Initial Lumens[6]		
		Low Ballast Factor (0.78)	Normal Ballast Factor (0.88)	High Ballast Factor (1.18)	Low Ballast Factor (0.78)	Normal Ballast Factor (0.88)	High Ballast Factor (1.18)
InstantFit LED T8 - 4'							
46826-4	10.0	11.0	13.0	16.0	1300	1500	1700
46827-2	10.0	11.0	13.0	16.0	1300	1500	1800
46828-0	10.0	11.0	13.0	16.0	1400	1600	1850
46829-8	10.0	11.0	13.0	16.0	1400	1600	1850
46956-9	10.0	11.0	13.0	16.0	1300	1500	1700
46957-7	10.0	11.0	13.0	16.0	1300	1500	1800
46958-5	10.0	11.0	13.0	16.0	1400	1600	1850
46959-3	10.0	11.0	13.0	16.0	1400	1600	1850
InstantFit LED T8 - 4' dimmable high output							
46830-6	14.0	15.0	17.0	23.0	1800	2000	2700
46831-4	14.0	15.0	17.0	23.0	1800	2000	2700
46832-2	14.0	15.0	17.0	23.0	1900	2100	2800
46833-0	14.0	15.0	17.0	23.0	1900	2100	2800
46960-1	14.0	15.0	17.0	23.0	1800	2000	2700
46961-9	14.0	15.0	17.0	23.0	1800	2000	2700
46962-7	14.0	15.0	17.0	23.0	1900	2100	2800
46963-5	14.0	15.0	17.0	23.0	1900	2100	2800
InstantFit LED T8 - 4' high output glass							
47009-6	14.0	15.0	17.0	23.0	1750	2000	2350
47010-4	14.0	15.0	17.0	23.0	1750	2000	2350
47011-2	14.0	15.0	17.0	23.0	1850	2100	2450
47012-0	14.0	15.0	17.0	23.0	1850	2100	2450s
InstantFit LED T8 - 4' ultra high output							
46313-3	16.5	18.0	20.0	27.0	2200	2400	2950
46314-1	16.5	18.0	20.0	27.0	2250	2500	3050
46315-8	16.5	18.0	20.0	27.0	2250	2500	3050
InstantFit LED T8 - 4' glass							
45656-6	17.0	18.0	20.0	26.5	1850	2100	2450
45657-4	17.0	18.0	20.0	26.5	1850	2100	2450
InstantFit LED T8 - 3'							
46932-0	9.0	10.5	11.5	15.5	950	1100	1300
46933-8	9.0	10.5	11.5	15.5	950	1100	1300
46934-6	9.0	10.5	11.5	15.5	1050	1200	1400
46935-3	9.0	10.5	11.5	15.5	1050	1200	1400
InstantFit LED - 2' high output							
46927-0	7.0	8.5	9.5	13.5	950	1050	1200
46928-8	7.0	8.5	9.5	13.5	950	1050	1200
46929-6	7.0	8.5	9.5	13.5	1050	1150	1300
46930-4	7.0	8.5	9.5	13.5	1050	1150	1300
InstantFit LED T8/T12 - 8'							
46923-9	35.0	N/A	41.0	N/A	N/A	4000	N/A
46924-7	35.0	N/A	41.0	N/A	N/A	4000	N/A
46925-4	35.0	N/A	41.0	N/A	N/A	4200	N/A
46926-2	35.0	N/A	41.0	N/A	N/A	4200	N/A
InstantFit LED T5 high output							
46712-6	24.0	N/A	28.0	N/A	N/A	3300	N/A
46713-4	24.0	N/A	28.0	N/A	N/A	3300	N/A
46714-2	24.0	N/A	28.0	N/A	N/A	3500	N/A
46715-9	24.0	N/A	28.0	N/A	N/A	3500	N/A
InstantFit LED T8 U-Bent - 6" high output							
46937-9	13.0	14.0	16.0	21.0	1800	2000	2700
46938-7	13.0	14.0	16.0	21.0	1800	2000	2700
46939-5	13.0	14.0	16.0	21.0	1900	2100	2800
46940-3	13.0	14.0	16.0	21.0	1900	2100	2800
LED InstantFit - 4' dimmable rotatable high output							
46865-2	14.0	15.0	17.0	23.0	1800	2000	2700
46866-0	14.0	15.0	17.0	23.0	1800	2000	2700
46867-8	14.0	15.0	17.0	23.0	1900	2100	2800
46868-6	14.0	15.0	17.0	23.0	1900	2100	2800

See footnotes on last page.

Philips InstantFit LED lamps

Philips InstantFit LED T8 electro magnetic compatible lamps

Ordering, electrical and technical data (Subject to change without notice)

Product No.	Model No.	Ordering Code	Volts (Depending on Ballast)	Base	CRI	Color Temp. (K)	LED Liftetime (hrs.)[4]	MOL (In.)	Beam Angle
InstantFit LED T8 EM compatible[5] – 4' glass									
46311-7	9290012265	20T12 EM LED/48-4000 IF G	120-277	G13	83	4000	36,000	48	240°
46312-5	9290012266	20T12 EM LED/48-6500 IF G	120-277	G13	83	6500	36,000	48	240°

Ballast technical data (Subject to change without notice)

Product No.	Bare Lamp Watts (W)	Average System Watts (W)			Initial Lumens[4]		
		Low Ballast Factor (0.78)	Normal Ballast Factor (0.88)	High Ballast Factor (1.18)	Low Ballast Factor (0.78)	Normal Ballast Factor (0.88)	High Ballast Factor (1.18)
InstantFit LED T8 EM compatible – 4' glass							
46311-7	20	20	23	31	1850	2100	2800
46312-5	20	20	23	31	1850	2100	2800

Suitable for use in fixtures where ambient temperature is between -4°F (-20°C) and 113°F (45°C).

System wattage of the Philips InstantFit T8 vs a comparable linear T12[7]

Ballast Model No.	Manufacturer	System Voltage	No. of Lamps	System Power (W) T12 Fluorescent	System Power (W) T8 LED	Energy Savings (%)[9]
R-140-1-TP	Philips Advance	120	1	52.1	26.1	50.0%
RL-140-TP	Philips Advance	120	1	32.8	25.6	21.7%
R-2S40-1-TP	Philips Advance	120	2	88.9	47.1	47.0%
XQM-2S40-TP	Philips Advance	220	2	95.5	51.9	45.6%
V-2S40-1-TP	Philips Advance	277	2	90.2	45.3	49.8%
RQM-2S40-3-TP	Philips Advance	120	2	86.9	46.4	46.6%
R-2S34-TP-5	Philips Advance	120	2	81.1	41.5	48.8%
V-2S34-TP	Philips Advance	277	2	79.2	42.6	46.3%
RM-2S35-TP	Philips Advance	120	2	60.9	41.2	32.4%

See footnotes on last page.

Philips InstantFit LED lamps

Philips InstantFit LED T8 lamps

Shipping data (Subject to change without notice)

Product Number	SKU UPC (0-46677)	Outer Bar Code (5-00-46677)	Case Qty.	Case Weight (lbs.)	Case Cube (cu. Ft.)	Pallet Qty	Lamps/ SKU	SKUs per Layer	Layers High	SKU Dimensions (L x W x H) (In.)	Case Dimensions (L x W x H) (In.)	Pallet Dimensions (L x W x H) (In.)
InstantFit LED T8 - 4'												
46826-4	47219-1	46826-7	10	6.2	0.42	1120	1	70	16	48.0 x 1.1 x 1.1	49.3 x 5.5 x 2.7	50.4 x 39.4 x 48.7
46827-2	47220-7	46827-4	10	6.2	0.42	1120	1	70	16	48.0 x 1.1 x 1.1	49.3 x 5.5 x 2.7	50.4 x 39.4 x 48.7
46828-0	47221-4	46828-1	10	6.2	0.42	1120	1	70	16	48.0 x 1.1 x 1.1	49.3 x 5.5 x 2.7	50.4 x 39.4 x 48.7
46829-8	47222-1	46829-8	10	6.2	0.42	1120	1	70	16	48.0 x 1.1 x 1.1	49.3 x 5.5 x 2.7	50.4 x 39.4 x 48.7
46956-9	47260-3	46956-1	10	9.7	0.60	600	1	60	10	48.0 x 1.1 x 1.1	48.8 x 6.0 x 3.5	49.2 x 39.4 x 40.9
46957-7	47261-0	46957-8	10	9.7	0.60	600	1	60	10	48.0 x 1.1 x 1.1	48.8 x 6.0 x 3.5	49.2 x 39.4 x 40.9
46958-5	47262-7	46958-5	10	9.7	0.60	600	1	60	10	48.0 x 1.1 x 1.1	48.8 x 6.0 x 3.5	49.2 x 39.4 x 40.9
46959-3	47263-4	46959-2	10	9.7	0.60	600	1	60	10	48.0 x 1.1 x 1.1	48.8 x 6.0 x 3.5	49.2 x 39.4 x 40.9
InstantFit LED T8 - 4' dimmable high output												
46830-6	47223-8	46830-4	10	6.2	0.42	1120	1	70	16	48.0 x 1.1 x 1.1	49.3 x 5.5 x 2.7	50.4 x 39.4 x 48.7
46831-4	47224-5	46831-1	10	6.2	0.42	1120	1	70	16	48.0 x 1.1 x 1.1	49.3 x 5.5 x 2.7	50.4 x 39.4 x 48.7
46832-2	47225-2	46832-8	10	6.2	0.42	1120	1	70	16	48.0 x 1.1 x 1.1	49.3 x 5.5 x 2.7	50.4 x 39.4 x 48.7
46833-0	47226-9	46833-5	10	6.2	0.42	1120	1	70	16	48.0 x 1.1 x 1.1	49.3 x 5.5 x 2.7	50.4 x 39.4 x 48.7
46960-1	47264-1	46960-8	10	9.7	0.60	600	1	60	10	48.0 x 1.1 x 1.1	48.8 x 6.0 x 3.5	49.2 x 39.4 x 40.9
46961-9	47265-8	46961-5	10	9.7	0.60	600	1	60	10	48.0 x 1.1 x 1.1	48.8 x 6.0 x 3.5	49.2 x 39.4 x 40.9
46962-7	47266-5	46962-2	10	9.7	0.60	600	1	60	10	48.0 x 1.1 x 1.1	48.8 x 6.0 x 3.5	49.2 x 39.4 x 40.9
46963-5	47267-2	46963-9	10	9.7	0.60	600	1	60	10	48.0 x 1.1 x 1.1	48.8 x 6.0 x 3.5	49.2 x 39.4 x 40.9
InstantFit LED T8 - 4' high output glass												
47009-6	45240-7	47009-3	10	6.2	0.42	550	1	50	16	48.0 x 1.1 x 1.1	49.5 x 7.1 x 3.9	50.6 x 39.4 x 48.3
47010-4	45275-9	47010-9	10	6.2	0.42	550	1	50	16	48.0 x 1.1 x 1.1	49.5 x 7.1 x 3.9	50.6 x 39.4 x 48.3
47011-2	45325-1	47011-6	10	6.2	0.42	550	1	50	16	48.0 x 1.1 x 1.1	49.5 x 7.1 x 3.9	50.6 x 39.4 x 48.3
47012-0	45248-3	47012-3	10	6.2	0.42	550	1	50	16	48.0 x 1.1 x 1.1	49.5 x 7.1 x 3.9	50.6 x 39.4 x 48.3
InstantFit LED T8 - 4' ultra high output												
46313-3	46313-7	46313-2	10	9.7	0.59	600	1	60	10	1.1 x 1.1 x 48.0	48.8 x 6.0 x 3.5	49.2 x 39.4 x 40.9
46314-1	46314-4	46314-9	10	9.7	0.59	600	1	60	10	1.1 x 1.1 x 48.0	48.8 x 6.0 x 3.5	49.2 x 39.4 x 40.9
46315-8	46315-1	46315-6	10	9.7	0.59	600	1	60	10	1.1 x 1.1 x 48.0	48.8 x 6.0 x 3.5	49.2 x 39.4 x 40.9
InstantFit LED T8 - 4' glass												
45656-6	45656-6	45656-1	10	9.7	1.06	360	1	40	10	1.1 x 1.1 x 48.0	49.8 x 8.8 x 4.2	51.2 x 39.4 x 43.4
45657-4	45657-3	45657-8	10	9.7	1.06	360	1	40	10	1.1 x 1.1 x 48.0	49.8 x 8.8 x 4.2	51.2 x 39.4 x 43.4
InstantFit LED T8 - 3'												
46932-0	47231-3	46932-5	10	4.5	0.31	1440	1	90	16	35.7 x 1.0 x 1.0	37.1 x 5.4 x 2.7	50.6 x 39.4 x 48.6
46933-8	47232-0	46933-2	10	4.5	0.31	1440	1	90	16	35.7 x 1.0 x 1.0	37.1 x 5.4 x 2.7	50.6 x 39.4 x 48.6
46934-6	47233-7	46934-9	10	4.5	0.31	1440	1	90	16	35.7 x 1.0 x 1.0	37.1 x 5.4 x 2.7	50.6 x 39.4 x 48.6
46935-3	47234-4	46935-6	10	4.5	0.31	1440	1	90	16	35.7 x 1.0 x 1.0	37.1 x 5.4 x 2.7	50.6 x 39.4 x 48.6
InstantFit LED T8 - 2' high output												
46927-0	47227-6	46927-1	10	2.6	0.23	2240	1	140	16	23.7 x 1.0 x 1.0	25.3 x 5.8 x 2.7	51.1 x 39.4 x 48.6
46928-8	47228-3	46928-8	10	2.6	0.23	2240	1	140	16	23.7 x 1.0 x 1.0	25.3 x 5.8 x 2.7	51.1 x 39.4 x 48.6
46929-6	47229-0	46929-5	10	2.6	0.23	2240	1	140	16	23.7 x 1.0 x 1.0	25.3 x 5.8 x 2.7	51.1 x 39.4 x 48.6
46930-4	47230-6	46930-1	10	2.6	0.23	2240	1	140	16	23.7 x 1.0 x 1.0	25.3 x 5.8 x 2.7	51.1 x 39.4 x 48.6
InstantFit LED T8/T12 - 8'												
46923-9	46923-8	46923-3	10	16.7	2.06	300	1	30	10	0.0 x 0.0 x 0.0	95.9 x 9.4 x 3.9	96.4 x 29.9 x 45.2
46924-7	46052-5	46052-0	10	16.7	2.06	300	1	30	10	0.0 x 0.0 x 0.0	95.9 x 9.4 x 3.9	96.4 x 29.9 x 45.2
46925-4	46925-2	46925-7	10	16.7	2.06	300	1	30	10	0.0 x 0.0 x 0.0	95.9 x 9.4 x 3.9	96.4 x 29.9 x 45.2
46926-2	46926-9	46926-4	10	16.7	2.06	300	1	30	10	0.0 x 0.0 x 0.0	95.9 x 9.4 x 3.9	96.4 x 29.9 x 45.2
InstantFit LED T5 high output												
46712-6	46712-8	46712-3	10	4.7	0.22	2000	1	100	20	0.0 x 0.0 x 0.0	46.3 x 4.0 x 2.1	47.2 x 40.6 x 47.6
46713-4	46713-5	46713-0	10	4.7	0.22	2000	1	100	20	0.0 x 0.0 x 0.0	46.3 x 4.0 x 2.1	47.2 x 40.6 x 47.6
46714-2	46714-2	46714-7	10	4.7	0.22	2000	1	100	20	0.0 x 0.0 x 0.0	46.3 x 4.0 x 2.1	47.2 x 40.6 x 47.6
46715-9	46715-9	46715-4	10	4.7	0.22	2000	1	100	20	0.0 x 0.0 x 0.0	46.3 x 4.0 x 2.1	47.2 x 40.6 x 47.6
InstantFit LED U-Bent - 6" high output												
46937-9	47235-1	46937-0	10	8.2	1.20	300	1	100	3	22.4 x 7.1 x 1.1	23.1 x 7.5 x 11.9	47.2 x 39.4 x 41.4
46938-7	47236-8	46938-7	10	8.2	1.20	300	1	100	3	22.4 x 7.1 x 1.1	23.1 x 7.5 x 11.9	47.2 x 39.4 x 41.4
46939-5	47237-5	46939-4	10	8.2	1.20	300	1	100	3	22.4 x 7.1 x 1.1	23.1 x 7.5 x 11.9	47.2 x 39.4 x 41.4
46940-3	47238-2	46940-0	10	8.2	1.20	300	1	100	3	22.4 x 7.1 x 1.1	23.1 x 7.5 x 11.9	47.2 x 39.4 x 41.4
LED InstantFit - 4' rotatable high output												
46865-2	47268-9	46865-6	10	6.2	0.42	1120	1	70	16	0.0 x 0.0 x 0.0	49.3 x 5.5 x 2.7	50.4 x 39.4 x 48.7
46866-0	47269-6	46866-3	10	6.2	0.42	1120	1	70	16	0.0 x 0.0 x 0.0	49.3 x 5.5 x 2.7	50.4 x 39.4 x 48.7
46867-8	47270-2	46867-0	10	6.2	0.42	1120	1	70	16	0.0 x 0.0 x 0.0	49.3 x 5.5 x 2.7	50.4 x 39.4 x 48.7
46868-6	47271-9	46868-7	10	6.2	0.42	1120	1	70	16	0.0 x 0.0 x 0.0	49.3 x 5.5 x 2.7	50.4 x 39.4 x 48.7

See footnotes on last page.

Philips InstantFit LED lamps

Philips InstantFit LED T8 electro magnetic compatible lamps

Shipping Data (Subject to change without notice)

Product Number	SKU UPC (0-46677)	Outer Bar Code (5-00-46677)	Case Qty.	Case Weight (lbs.)	Case Cube (cu. Ft.)	Pallet Qty	Lamps/ SKU	SKUs per Layer	Layers High	SKU Dimensions (W x D x H) (In.)	Case Dimensions (W x D x H) (In.)	Pallet Dimensions (W x D x H) (In.)
InstantFit LED T8 EM compatible - 4' glass												
46311-7	46311-3	46311-8	10	6.26	1.06	360	1	40	9	1.1 x 1.1 x 48.0	49.8 x 8.8 x 4.2	51.2 x 39.4 x 43.4
46312-5	46312-0	46312-5	10	6.26	1.06	360	1	40	9	1.1 x 1.1 x 48.0	49.8 x 8.8 x 4.2	51.2 x 39.4 x 43.4

Relative Light Output vs. Ambient Temperature

4' T8 Lamps - 0.88 BF Ballast

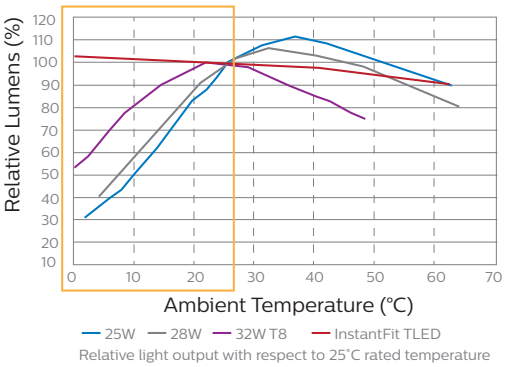

Suitable for use in fixtures where ambient temperature is between -4°F (-20°C) and 113°F (45°C).

Warning: Philips LED T8 InstantFit lamps will only operate properly on compatible Instant-start and Programmed-start ballasts. Please refer to the Philips LED T8 InstantFit Installation Guide, which can be obtained through your local Philips Sales Representative, or visit www.philips.com/instantfit

FCC Note: This device complies with Part 18 of the FCC Rules.

1. Based on the next leading competitor and their number of compatible ballasts at time of printing.
2. Savings based on comparison to F32T8 electronic instant start systems.
3. Tested to B50 L70 requirement with a ballast factor < 0.88.
4. LED lifetime means the length of time (in hours) until half of the LED light sources maintain at least 70% of their initial lumen output (B50, L70). Testing with a ballast whose ballast factor is ≤ 0.88
5. Compatibility subject to change as additional ballasts are tested. If you do not see your ballast on the compatibility list please contact your local Philips Lighting representative.
6. Photometric testing consistent with IES LM-79.
7. Measured data provided as a reference. System power may vary depending on ballast manufacturer and ballast age. Please refer to www.philips.com/instantfit for the latest ballast compatibility guide.
8. DLC Product ID list is for UL Type A only. The product may also be DLC certified as UL Type C. To verify search the DLC QPL using the model number.

● Products offered under the Trade Agreements Act (TAA).
For more information, visit http://www.va.gov/oal/business/fss/taa.asp

Not all products are qualified on the DLC QPL. To view our DLC qualified products, please consult the DLC Qualified Products List at www.designlights.org/search.

PLt-1309BN 06/17 philips.com/lighting

Philips Lighting North America Corporation
200 Franklin Square Drive, Somerset, NJ 08873
Tel. 855-486-2216

Philips Lighting Canada Ltd.
281 Hillmount Rd, Markham, ON, Canada L6C 2S3
Tel. 800-668-9008

LEDSS EXT® POST-TOP RETROFIT KIT

The LEDSS EXT Post-Top LED Upgrade Kit easily transforms existing inefficient luminaires with HID, HPS or MH lamps into energy efficient lighting with improved efficacy and significantly lower maintenance costs. Adjustable mounting bracket system for base up or down orientation. External driver. DLC Listed.

PROJECT NAME

PART NUMBER

PART NUMBER BUILDER

MANUFACTURER	MODEL NUMBER	LUMENS	COLOR TEMPERATURE	OPTIONS
RPT	LEDSSEXT		4000K	
		1800LM 4400LM	3000K*	OCC HI/LO VARIABLE OCCUPANCY SENSOR 10VDIM 0-10V DIMMABLE 347-480V AC

*Special order

ORDERING EXAMPLE

RPT-LEDSSEXT-4400LM-4000K-10VDIM

INSTALLATION GUIDE

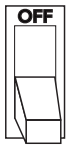

1

Turn off power to the fixture. Remove bulb and existing ballast or cut the wires to the ballast and bypass it.

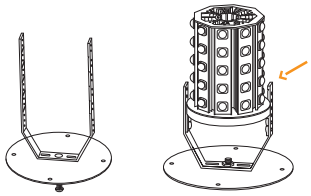

2

USING U-SHAPE BRACKET
Remove lamp base, use the screw bolt and nut to install the bracket to the hole where the lamp base was previously installed. Drive in the screws to fix the post top retrofit kit to the U-shape bracket (cut off the excess part of the bracket).

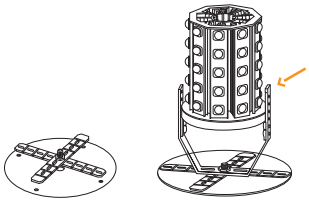

USING BREAK-OFF BRACKET
Remove lamp base, use a screw bolt and nut to fix the X-shape bracket to the hole where the post top retrofit was previously installed, attach the U-shape bracket to the X-shape bracket, fix the post top retrofit kit to the U-shape bracket (cut off the excess part of the bracket).

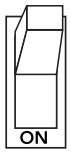

3

Install the LED driver in place of the ballast. Connect the wiring. Remove the plastic cover from the LED head. Restore power to fixture.

Simplified instructions. Reference full installation guide for more details. Only qualified personnel should perform installation.

QUICK SPECS

INPUT VOLTAGE	120-277V AC
EFFICACY	>120 LPW @ 4000K
OPERATING TEMP	-30˚C to 65˚C
MAX CASE TEMP	65˚C*
POWER FACTOR/THD	>0.90 Power Factor, THD<10%
CRI	73+
BEAM ANGLE SPREAD	360°
RATED LIFE	L70 LED Lifetime > 70,000 hrs
WARRANTY	6 years
CERTIFICATIONS	ETL Listed to UL Standards
PERFORMANCE LISTINGS	

DIMENSIONS

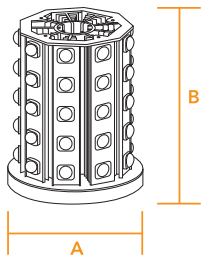

DIMENSIONS (INCHES)	A	B
RPT-LEDSSEXT-1800LM	3.66	3.0
RPT-LEDSSEXT-4400LM	3.66	4.8

* Max ambient temperature is 65C (150F). If used in a fully enclosed fixture, customer is responsible for proper thermal testing prior to use, otherwise RemPhos warranty is void.

May be protected under the following US patents - US 8,106569 | US 8,882,298 | Additional patents pending. Information is subject to change without notice.

LEDSS EXT® POST-TOP RETROFIT KIT

ORDERING GUIDE

ENERGY STAR	DLC	PART #	LUMEN OUTPUT (LM)	WATTAGE (W)	CCT (K)	VOLTAGE RANGE (V AC)	WARRANTY (YRS)	TRADITIONAL EQUIVALENT	WATTS SAVED (W)
	●	RPT-LEDSSEXT-1800LM-4000K	1800	16	4000	120-277	6	50-100W HID	up to 84
	●	RPT-LEDSSEXT-4400LM-4000K	4400	40	4000	120-277	6	100-250W HID	up to 210

FEATURES

FLEXIBLE BRACKET SYSTEM

The LEDSS EXT® comes with a proprietary adjustable bracket system for easy installation. This flexible, time saving adjustable bracket allows the light engine to be mounted to virtually any fixture in either base up or base down orientation.

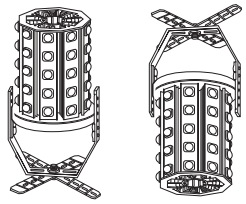

INTEGRATED PATENTED OPTICS

Integrated patented optics on each LED to direct light down to the ground and prevent wasted upwards illumination.

OPTIONAL FACTORY INSTALLED OCC SENSOR

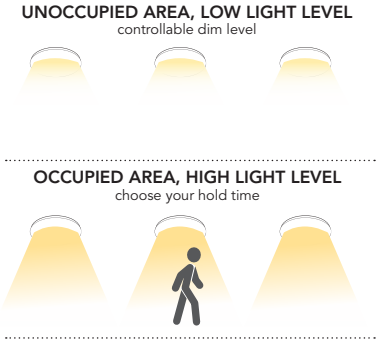

The LEDSS EXT can be paired with our integral occupancy sensor for maximum energy savings. Unlike traditional passive infrared or ultrasonic occupancy sensors, this high-frequency sensor can be hidden behind the lens of an existing fixture, eliminating the need for external sensors and providing a clean look.

EXAMPLE FIXTURES

RemPhos Technologies LLC • p 877.997.3674 • www.remphos.com
90 Holten Street • Danvers, MA USA • sales@remphos.com

VAN1LED6NW

Low-profile vandalproof fixture replaces traditional incandescent luminaires delivering impressive energy savings.

Color: White

Weight: 1.2 lbs

Project:	Type:
Prepared By:	Date:

Driver Info

Type:	Constant Current
120V:	0.055A
208V:	N/A
240V:	N/A
277V:	N/A
Input Watts:	6W
Efficiency:	94%

LED Info

Watts:	6W
Color Temp:	4000K
Color Accuracy:	83 CRI
L70 Lifespan:	50000
Lumens:	813
Efficacy:	128 LPW

Technical Specifications

Listings

UL Listing:

Suitable for Wet Locations. Covered Ceiling Mount Only.

DLC Listed:

This product is on the Design Lights Consortium (DLC) Qualified Products List and is eligible for rebates from DLC Member Utilities.
DLC Product Code: PZB356ZE

IESNA LM-79 & LM-80 Testing:

RAB LED luminaires have been tested by an independent laboratory in accordance with IESNA LM-79 and LM-80, and have received the Department of Energy "Lighting Facts" label.

Electrical

Driver:

AC board, 50/60 Hz., 120V: 55mA

Dimmer Compatibility:

TRIAC/ELV dimming capable.

THD:

11.4% at 120V

Power Factor:

99.3% at 120V

Surge Protection:

2.5KV

Construction

Cold Weather Starting:

The minimum starting temperature is -22° F (-30° C).

Ambient Temperature:

Suitable for use in 113°F (45°C) ambient temperatures.

Housing:

Precision steel housing

Mounting:

Ceiling mount to recessed junction with knockout template. Tamperproof screws.

Lens:

Vandalproof, frosted polycarbonate drop lens

Gaskets:

High-temperature silicone gaskets

Finish:

Our environmentally friendly polyester powder coatings are formulated for high-durability and long-lasting color, and contain no VOC or toxic heavy metals.

Green Technology:

Mercury and UV free. RoHS compliant components. Polyester powder coat finish formulated without the use of VOC or toxic heavy metals.

LED Characteristics

Lifespan:

50,000-hour LED lifespan based on IES LM-80 results and TM-21 calculations.

LEDs:

120V long-lfe LEDs

Color Stability:

RAB LEDs exceed industry standards for chromatic stability.

Color Uniformity:

RAB's range of CCT (Correlated Color Temperature) follows the guidelines of the American National Standard for Specifications for the Chromaticity of Solid State Lighting (SSL) Products, ANSI C78.377-2015.

Other

Optional Sensor:

VAN1LED is compatible with occupancy sensors.

Warranty:

RAB warrants that our LED products will be free from defects in materials and workmanship for a period of five (5) years from the date of delivery to the end user, including coverage of light output, color stability, driver performance and fixture finish. See our full warranty

VAN1LED6NW

Dimensions

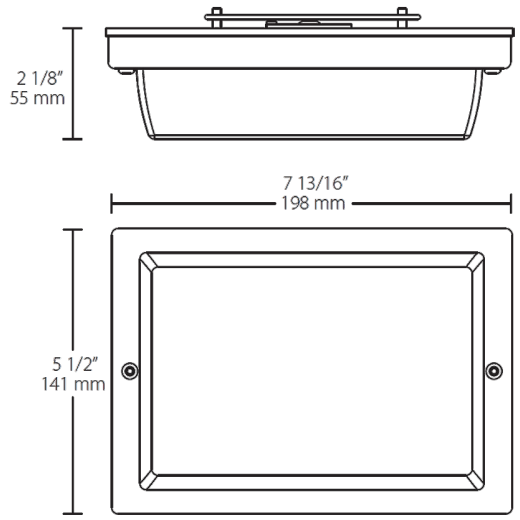

Features

- Vandalproof polycarbonate drop lens
- Ultra efficiency
- Low-profile design

Ordering Matrix

Family	Watts	Color Temp	Finish
VAN1LED	6	N	W
	12 = 12W **6** = 6W	**Blank** = 5000K (Cool) **N** = 4000K (Neutral) **Y** = 3000K (Warm)	**W** = White

VANLED10NW

Low-profile vandal-resistant fixture covers the footprint of most traditional canopy lights. Available in flat or drop lens.

Color: White

Weight: 12.0 lbs

Project:	Type:
Prepared By:	Date:

Driver Info

Type:	Constant Current
120V:	0.30A
208V:	0.20A
240V:	0.17A
277V:	0.15A
Input Watts:	14W
Efficiency:	74%

LED Info

Watts:	10W
Color Temp:	4000K
Color Accuracy:	78 CRI
L70 Lifespan:	100000
Lumens:	1708
Efficacy:	127 LPW

Technical Specifications

Listings

UL Listing:

Suitable for wet locations.

DLC Listed:

This product is on the Design Lights Consortium (DLC) Qualified Products List and is eligible for rebates from DLC Member Utilities.
DLC Product Code: P9S2AMNG

IESNA LM-79 & LM-80 Testing:

RAB LED luminaires have been tested by an independent laboratory in accordance with IESNA LM-79 and LM-80, and have received the Department of Energy "Lighting Facts" label.

Electrical

Driver:

Class 2, Constant Current, 100-277V, 50-60Hz, 280mA

THD:

16.4% at 277V

Construction

Maximum Ambient Temperature:

Suitable for use in 104° F (40°C) ambient temperatures

Cold Weather Starting:

Minimum starting temperature is -40° F (-40° C)

Housing:

Die-cast aluminum housing and lens frame with (4) 1/2" NPS side conduit entries and weatherproof rear wire plug and access plate

Mounting:

Ceiling mount to recessed junction with knockout template or directy to ceiling surface, utilizing side conduit entry points.

IP Rating:

Ingress Protection rating of IP66 for dust and water

Lens:

Vandal-resistant polycarbonate textured opaque for low glare drop lens

Reflector:

Semi-specular, vacuum-metalized polycarbonate

Gaskets:

High-temperature silicone gaskets

Finish:

Our environmentally friendly polyester powder coatings are formulated for high-durability and long-lasting color, and contain no VOC or toxic heavy metals.

Green Technology:

Mercury and UV free. RoHS compliant components. Polyester powder coat finish formulated without the use of VOC or toxic heavy metals.

LED Characteristics

LEDs:

Discreet LEDs on PCB board

Color Stability:

RAB LEDs exceed industry standards for chromatic stability.

Color Uniformity:

RAB's range of CCT (Correlated Color Temperature) follows the guidelines of the American National Standard for Specifications for the Chromaticity of Solid State Lighting (SSL) Products, ANSI C78.377-2015.

Other

Warranty:

RAB warrants that our LED products will be free from defects in materials and workmanship for a period of five (5) years from the date of delivery to the end user, including coverage of light output, color stability, driver performance and fixture finish. See our full warranty

Country of Origin:

Designed by RAB in New Jersey and assembled in the USA by RAB's IBEW Local 3 workers.

Buy American Act Compliant:

This product is a COTS item manufactured in the United States, and is compliant with the Buy American Act.

Recovery Act (ARRA) Compliant:

This product complies with the 52.225-21 "Required Use of American Iron, Steel, and Manufactured Goods-- Buy American Act-- Construction Materials (October 2010).

GSA Schedule:

Suitable in accordance with FAR Subpart 25.4.

California Title 24:

See VANLED10/PCS, VANLED10/PCS2 or VANLED10MSfor a 2013 California Title 24 compliant model.

Replacement:

Replaces up to 50W Metal Halide.

VANLED10NW

Dimensions

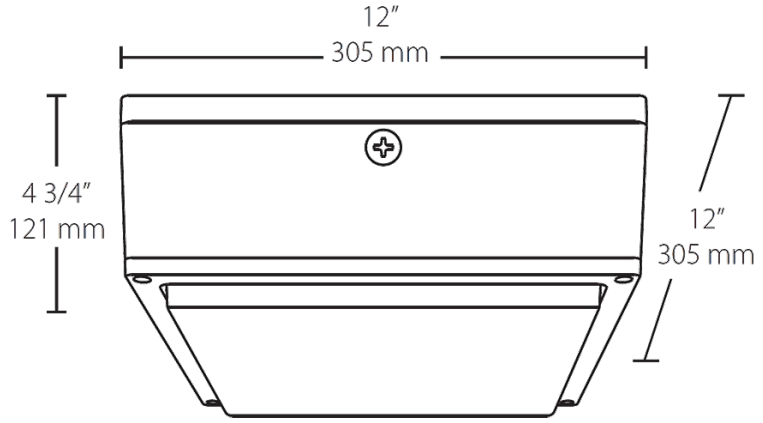

Features

- Fits the footprint of older canopy lights
- Vandal resistant and UV resistant lens
- Ultra-high efficiency
- Clean, contemporary, low-profile design
- Available with drop lens or flat lens
- IP66 rated, keeps dust, bugs and water out
- Photo and motion sensor options available

Ordering Matrix

Family	Watts	Color Temp	Lens	Finish	Voltage	Dimming
VANLED						
	10 = 10W **20** = 20W **40** = 40W **52** = 52W **65** = 65W **75** = 75W	**Blank** = 5000K (Cool) **Y** = 3000K (Warm) **N** = 4000K (Neutral)	**Blank** = Drop lens **F** = Flat lens	**Blank** = Bronze **W** = White	**Blank** = 120-277V **/480** = 480V (10W & 20W not available)	**Blank** = No Dimming **/D10** = Dimmable (10W & 20W not available)

WP2LED24

Affordable 37W and 24W LED wallpacks with traditional look. 100,000 hour L70 lifespan. 5-Year Warranty.

Color: Bronze

Weight: 9.6 lbs

Project:	Type:
Prepared By:	Date:

Driver Info

Type:	Constant Current
120V:	0.2A
208V:	0.13A
240V:	0.11A
277V:	0.09A
Input Watts:	25W
Efficiency:	98%

LED Info

Watts:	24W
Color Temp:	5000K
Color Accuracy:	83 CRI
L70 Lifespan:	100000
Lumens:	2998
Efficacy:	122 LPW

Technical Specifications

Listings

UL Listing:

Suitable for wet locations. Wall mount only.

IESNA LM-79 & LM-80 Testing:

RAB LED luminaires have been tested by an independent laboratory in accordance with IESNA LM-79 and LM-80, and have received the Department of Energy "Lighting Facts" label.

DLC Listed:

This product is on the Design Lights Consortium (DLC) Qualified Products List and is eligible for rebates from DLC Member Utilities.
DLC Product Code: P45YDNAR

Electrical

Driver:

Constant Current, Class 2, 450mA, 50/60 Hz. 100 - 277V, 4kV surge protection

Optical

BUG Rating:

B1 U3 G3

Construction

Thermal Management:

Superior thermal management with die-cast aluminum heatsink

Maximum Ambient Temperature:

Suitable for use in 104° F (40°C) ambient temperatures

Cold Weather Starting:

Minimum starting temperature is -40° F (-40° C)

Housing:

Precision die-cast aluminum housing.

Mounting:

Die-cast backbox with four (4) conduit entry points and knockout pattern for junction box or direct wall mounting. Hinged door for easy re-assembly.

Lens:

Prismatic, heat-resistant borosilicate glass

Reflector:

High-gloss white aluminum

Gaskets:

High-temperature silicone gaskets.

Finish:

Formulated for high-durability and long lasting color.

Green Technology:

Mercury and UV free. RoHS compliant components. Polyester powder coat finish formulated without the use of VOC or toxic heavy metals.

LED Characteristics

Color Stability:

LED color temperature is warrantied to shift no more than 200K in CCT over a 5 year period.

Color Uniformity:

RAB's range of CCT (Correlated Color Temperature) follows the guidelines of the American National Standard for Specifications for the Chromaticity of Solid State Lighting (SSL) Products, ANSI C78.377-2015.

Other

Warranty:

RAB warrants that our LED products will be free from defects in materials and workmanship for a period of five (5) years from the date of delivery to the end user, including coverage of light output, color stability, driver performance and fixture finish. See our full warranty

WP2LED24

RAB LIGHTING

Dimensions

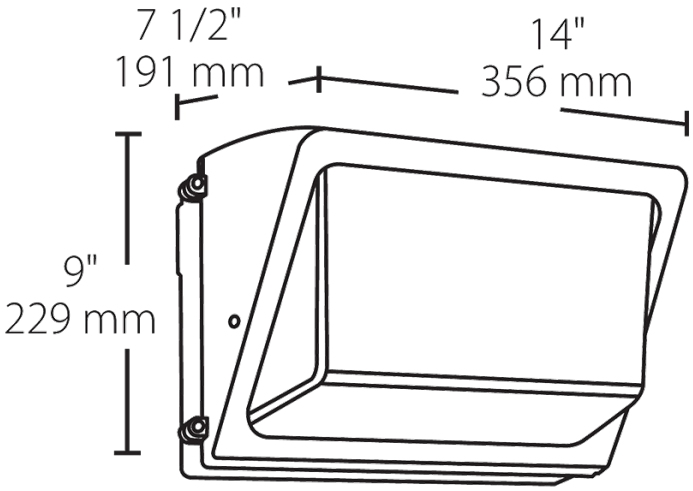

Features

- Covers footprint of traditional HID wallpacks
- WP2LED replaces up to 175W MH
- 100,000-Hour LED lifespan

Ordering Matrix

Family	Watts	Color Temp	Finish	White	Voltage	Photocell
WP2LED	24					
	24 = 24W **37** = 37W	**Blank** = 5000K (Cool) **Y** = 3000K (Warm) **N** = 4000K (Neutral)	**Blank** = Bronze **W** = White	**W** = White	**Blank** = 120-277V **/480** = 480V (Only available for 37W)	**/PC** = 120V Button **/PCS** = 120V Swivel **/PC2** = 277V Button **/PCS2** = 277V Swivel **/PCS4** = 480V Swivel

3M™ Super 77™ Multi-Purpose Spray Adhesive – Low VOC <25%

Technical Data **March 2012**

Product Description

A high tack and fast drying mist spray adhesive.

Key Features

- Securely bonds many lightweight materials such as attaching foils, carpeting, lightweight paper, cardboard, felt, and cloth to painted or unpainted metals, wood.
- Meets CARB / OTC VOC Requirements.
- Helps contribute to LEED® credits.
- GREENGUARD Indoor Air Quality Certified®.

Typical Properties

Note: The following technical information and data should be considered representative or typical only and should not be used for specification purposes.

Product	**3M™ Super 77 ™ Multi-Purpose Spray Adhesive – Low VOC <25%**
Base:	Synthetic Elastomer
Solids Content - (by wt.):	19.4%
Density (lbs/gal):	6.6
Viscosity (cps):	N/A
Color(s):	Translucent
Volatile Organic Compounds (VOC):	< 25%
Hazardous Air Pollutants (HAPS) % wt (calculated):	No
CARB Compliant:	Yes
GREENGUARD Indoor Air Quality Certified®:	Yes
LEED® Eligible:	Yes
Coverage @ 1 gram /ft^2 per Can:	99
Spray Pattern:	Mist
Dry Time:	15 - 30 sec.
Bonding Range:	15 sec. – 30 mn.
Shear Adhesion Failure Test - SAFT[(1)]:	205
Flammable Solvent:	Yes
Flammable Propellant:	Yes

[(1)]SAFT Shear Adhesion Failure Test with birch plywood, 1 inch overlap, 100 grams used, temperature start at 90F and ramped 10F every 10 mn. until complete failure.

Available Sizes

Container Size	**3M Stock Number**	**UPC Number**
24 Fl. Oz. (Net Wt. 18.0 oz) - clear	62-4876-4930-3	00-051111-97956-3

Super 77™ Multi-Purpose Spray Adhesive – Low VOC <25%

Storage	Store product at 60°-80°F (16°-27°C) for maximum storage life. Higher temperatures reduce normal storage life. Lower temperatures may cause increased viscosity of a temporary nature. Rotate stock on a "first in-first out" basis.
Shelf Life	When stored at the recommended conditions in original, unopened container, this product has a shelf life if 15 months from date of shipment.
Precautionary Information	Refer to product label and Material Safety Data Sheet for health and safety information before using this product. For additional health and safety information, call 1-800-364-3577 or (651) 737-6501.
Technical Information	The technical information, recommendations and other statements contained in this document are based upon testes or experience that 3M believes are reliable, but the accuracy or completeness of such information is not guaranteed.
Product Use	Many factors beyond 3M's control and uniquely within user's knowledge and control can affect the use and performance of a 3M product in a particular application. Given the variety of factors that can affect the use and performance of a 3M product, user is solely responsible for evaluating the 3M product and determining whether it is fit for a particular purpose and suitable for user's method of application.
Warranty, Limited Remedy, and Disclaimer	Unless an additional warranty is specifically stated on the applicable 3M product packaging or product literature, 3M warrants that each 3M product meets the applicable 3M product specification at the time 3M ships the product. 3M MAKES NO OTHER WARRANTIES OR CONDITIONS, EXPRESS OR IMPLIED, INCLUDING, BUT NOT LIMITED TO, ANY IMPLIED WARRANTY OR CONDITION OF MERCHANTABILITY OR FITNESS FOR A PARTICULAR PURPOSE OR ANY IMPLIED WARRANTY OR CONDITION ARISING OUT OF A COURSE OF DEALING, CUSTOMER OR USAGE OF TRADE. If the 3M product does not conform to this warranty, then the sole and exclusive remedy is, at 3M's option, replacement of the 3M product or refund of the purchase price.
Limitation of Liability	Except where prohibited by law, 3M will not be liable for any loss or damage arising from the 3M product, whether direct, indirect, special, incidental or consequential, regardless of the legal theory asserted, including warranty, contract, negligence or strict liability.

Industrial Adhesives and Tapes Division
3M Center, Building 225-3S-06
St. Paul, MN 55144-1000
800-362-3550 • 877-369-2923 (Fax)
www.3M.com/lowvocaerosols

Safety Data Sheet

Document Group:	16-3472-4	**Version Number:**	37.00
Issue Date:	09/11/14	**Supercedes Date:**	04/19/12

SECTION 1: Identification

1.1. Product identifier
3M(TM) Super 77(TM) Multipurpose Adhesive (Aerosol)

Product Identification Numbers
62-4977-4730-3, 62-4977-4925-9, 62-4977-4929-1, 62-4977-4930-9, 62-4977-4935-8

1.2. Recommended use and restrictions on use

Recommended use
general purpose aerosol adhesive, General Purpose Aerosol adhesive

1.3. Supplier's details

MANUFACTURER:	3M
DIVISION:	Industrial Adhesives and Tapes Division
ADDRESS:	3M Center, St. Paul, MN 55144-1000, USA
Telephone:	1-888-3M HELPS (1-888-364-3577)

1.4. Emergency telephone number
1-800-364-3577 or (651) 737-6501 (24 hours)

SECTION 2: Hazard identification

2.1. Hazard classification
Flammable Aerosol: Category 1.
Serious Eye Damage/Irritation: Category 2A.
Reproductive Toxicity: Category 2.
Simple Asphyxiant.
Specific Target Organ Toxicity (single exposure): Category 1.
Specific Target Organ Toxicity (central nervous system): Category 3.

2.2. Label elements
Signal word
Danger

Symbols
Flame | Exclamation mark | Health Hazard |

Pictograms

Hazard Statements
Extremely flammable aerosol.

Causes serious eye irritation.
May cause drowsiness or dizziness.
Suspected of damaging fertility or the unborn child.
May displace oxygen and cause rapid suffocation.

Causes damage to organs:
cardiovascular system |

Precautionary Statements
General:
Keep out of reach of children.

Prevention:
Obtain special instructions before use.
Do not handle until all safety precautions have been read and understood.
Keep away from heat/sparks/open flames/hot surfaces. - No smoking.
Do not spray on an open flame or other ignition source.
Pressurized container: Do not pierce or burn, even after use.
Do not breathe dust/fume/gas/mist/vapors/spray.
Use only outdoors or in a well-ventilated area.
Wear protective gloves and eye/face protection.
Do not eat, drink or smoke when using this product.
Wash thoroughly after handling.

Response:
IF INHALED: Remove person to fresh air and keep comfortable for breathing.
IF IN EYES: Rinse cautiously with water for several minutes. Remove contact lenses, if present and easy to do. Continue rinsing.
If eye irritation persists: Get medical advice/attention.
IF exposed or concerned: Get medical advice/attention.
Specific treatment (see Notes to Physician on this label).

Storage:
Protect from sunlight. Do not expose to temperatures exceeding 50C/122F.
Keep container tightly closed.
Store locked up in a well-ventilated place.

Disposal:
Dispose of contents/container in accordance with applicable local/regional/national/international regulations.

Notes to Physician:
Exposure may increase myocardial irritability. Do not administer sympathomimetic drugs unless absolutely necessary.

2.3. Hazards not otherwise classified
None.

36% of the mixture consists of ingredients of unknown acute dermal toxicity.

SECTION 3: Composition/information on ingredients

Ingredient	C.A.S. No.	% by Wt
Non-volatile components (N.J.T.S. Registry No. 04499600-6433P)	Trade Secret*	20 - 30 Trade Secret *
Acetone	67-64-1	20 - 30 Trade Secret *
Propane	74-98-6	15 - 25 Trade Secret *
Cyclohexane	110-82-7	10 - 20 Trade Secret *
Petroleum distillates	64742-49-0	10 - 20 Trade Secret *
Hexane	110-54-3	< 0.5

*The specific chemical identity and/or exact percentage (concentration) of this composition has been withheld as a trade secret.

SECTION 4: First aid measures

4.1. Description of first aid measures

Inhalation:
Remove person to fresh air. Get medical attention.

Skin Contact:
Wash with soap and water. If signs/symptoms develop, get medical attention.

Eye Contact:
Immediately flush with large amounts of water. Remove contact lenses if easy to do. Continue rinsing. Get medical attention.

If Swallowed:
Rinse mouth. If you feel unwell, get medical attention.

4.2. Most important symptoms and effects, both acute and delayed
See Section 11.1. Information on toxicological effects.

4.3. Indication of any immediate medical attention and special treatment required
Exposure may increase myocardial irritability. Do not administer sympathomimetic drugs unless absolutely necessary.

SECTION 5: Fire-fighting measures

5.1. Suitable extinguishing media
Use a fire fighting agent suitable for the surrounding fire.

5.2. Special hazards arising from the substance or mixture
Closed containers exposed to heat from fire may build pressure and explode.

Hazardous Decomposition or By-Products

Substance	Condition
Aldehydes	During Combustion
Carbon monoxide	During Combustion
Carbon dioxide	During Combustion

5.3. Special protective actions for fire-fighters

Water may not effectively extinguish fire; however, it should be used to keep fire-exposed containers and surfaces cool and prevent explosive rupture.

SECTION 6: Accidental release measures

6.1. Personal precautions, protective equipment and emergency procedures
Evacuate area. Keep away from heat/sparks/open flames/hot surfaces. - No smoking. Use only non-sparking tools. Ventilate the area with fresh air. For large spill, or spills in confined spaces, provide mechanical ventilation to disperse or exhaust vapors, in accordance with good industrial hygiene practice. Warning! A motor could be an ignition source and could cause flammable gases or vapors in the spill area to burn or explode. Refer to other sections of this SDS for information regarding physical and health hazards, respiratory protection, ventilation, and personal protective equipment.

6.2. Environmental precautions
Avoid release to the environment.

6.3. Methods and material for containment and cleaning up
If possible, seal leaking container. Place leaking containers in a well-ventilated area, preferably an operating exhaust hood, or if necessary outdoors on an impermeable surface until appropriate packaging for the leaking container or its contents is available. Contain spill. Cover spill area with a fire-extinguishing foam. An appropriate aqueous film forming foam (AFFF) is recommended. Working from around the edges of the spill inward, cover with bentonite, vermiculite, or commercially available inorganic absorbent material. Mix in sufficient absorbent until it appears dry. Remember, adding an absorbent material does not remove a physical, health, or environmental hazard. Collect as much of the spilled material as possible using non-sparking tools. Place in a metal container approved for transportation by appropriate authorities. Clean up residue with an appropriate solvent selected by a qualified and authorized person. Ventilate the area with fresh air. Read and follow safety precautions on the solvent label and SDS. Seal the container. Dispose of collected material as soon as possible.

SECTION 7: Handling and storage

7.1. Precautions for safe handling
Keep out of reach of children. Do not handle until all safety precautions have been read and understood. Keep away from heat/sparks/open flames/hot surfaces. - No smoking. Do not spray on an open flame or other ignition source. Do not pierce or burn, even after use. Do not breathe dust/fume/gas/mist/vapors/spray. Do not get in eyes, on skin, or on clothing. Do not eat, drink or smoke when using this product. Wash thoroughly after handling. Avoid release to the environment. Avoid contact with oxidizing agents (eg. chlorine, chromic acid etc.) Use personal protective equipment (gloves, respirators, etc.) as required.

7.2. Conditions for safe storage including any incompatibilities
Store in a well-ventilated place. Keep container tightly closed. Protect from sunlight. Do not expose to temperatures exceeding 50C/122F. Store away from heat. Store away from acids. Store away from oxidizing agents.

SECTION 8: Exposure controls/personal protection

8.1. Control parameters

Occupational exposure limits
If a component is disclosed in section 3 but does not appear in the table below, an occupational exposure limit is not available for the component.

Ingredient	C.A.S. No.	Agency	Limit type	Additional Comments
Hexane	110-54-3	OSHA	TWA:1800 mg/m3(500 ppm)	
Hexane	110-54-3	ACGIH	TWA:50 ppm	Skin Notation
Cyclohexane	110-82-7	ACGIH	TWA:100 ppm	
Cyclohexane	110-82-7	OSHA	TWA:1050 mg/m3(300 ppm)	
Petroleum distillates	64742-49-0	CMRG	TWA:50 ppm	
Acetone	67-64-1	OSHA	TWA:2400 mg/m3(1000 ppm)	

Acetone	67-64-1	ACGIH	TWA:500 ppm;STEL:750 ppm	A4: Not class. as human carcin
Propane	74-98-6	ACGIH	Limit value not established:	
Propane	74-98-6	OSHA	TWA:1800 mg/m3(1000 ppm)	

ACGIH : American Conference of Governmental Industrial Hygienists
AIHA : American Industrial Hygiene Association
CMRG : Chemical Manufacturer's Recommended Guidelines
OSHA : United States Department of Labor - Occupational Safety and Health Administration
TWA: Time-Weighted-Average
STEL: Short Term Exposure Limit
CEIL: Ceiling

8.2. Exposure controls

8.2.1. Engineering controls
Do not remain in area where available oxygen may be reduced. Use general dilution ventilation and/or local exhaust ventilation to control airborne exposures to below relevant Exposure Limits and/or control dust/fume/gas/mist/vapors/spray. If ventilation is not adequate, use respiratory protection equipment.

8.2.2. Personal protective equipment (PPE)

Eye/face protection

Select and use eye/face protection to prevent contact based on the results of an exposure assessment. The following eye/face protection(s) are recommended:
Indirect Vented Goggles

Skin/hand protection
Select and use gloves and/or protective clothing approved to relevant local standards to prevent skin contact based on the results of an exposure assessment. Selection should be based on use factors such as exposure levels, concentration of the substance or mixture, frequency and duration, physical challenges such as temperature extremes, and other use conditions. Consult with your glove and/or protective clothing manufacturer for selection of appropriate compatible gloves/protective clothing.
Gloves made from the following material(s) are recommended: Butyl Rubber
Nitrile Rubber

Respiratory protection

An exposure assessment may be needed to decide if a respirator is required. If a respirator is needed, use respirators as part of a full respiratory protection program. Based on the results of the exposure assessment, select from the following respirator type(s) to reduce inhalation exposure:
Half facepiece or full facepiece supplied-air respirator

For questions about suitability for a specific application, consult with your respirator manufacturer.

SECTION 9: Physical and chemical properties

9.1. Information on basic physical and chemical properties

General Physical Form:	Liquid aerosol
Specific Physical Form:	Aerosol
Odor, Color, Grade:	Clear, sweet, fruity odor
Odor threshold	*No Data Available*
pH	*No Data Available*
Melting point	*No Data Available*
Boiling Point	*Not Applicable*
Flash Point	-42.00 ºF [*Test Method:* Tagliabue Closed Cup]
Evaporation rate	1.90 [*Ref Std:* ETHER=1]

Flammability (solid, gas)	Not Applicable
Flammable Limits(LEL)	*No Data Available*
Flammable Limits(UEL)	*No Data Available*
Vapor Density	2.97 [*Ref Std:* AIR=1]
Density	0.726 g/ml
Specific Gravity	0.726 [*Ref Std:* WATER=1]
Solubility in Water	Nil
Solubility- non-water	*No Data Available*
Partition coefficient: n-octanol/ water	*No Data Available*
Autoignition temperature	*No Data Available*
Decomposition temperature	*Not Applicable*
Viscosity	*Not Applicable*
Hazardous Air Pollutants	<=0.4 % weight [*Test Method:* Calculated]
VOC Less H2O & Exempt Solvents	<=51 % [*Test Method:* calculated SCAQMD rule 443.1]
Solids Content	>=22.4 %

SECTION 10: Stability and reactivity

10.1. Reactivity
This material may be reactive with certain agents under certain conditions - see the remaining headings in this section.

10.2. Chemical stability
Stable.

10.3. Possibility of hazardous reactions
Hazardous polymerization will not occur.

10.4. Conditions to avoid
Heat

10.5. Incompatible materials
Strong oxidizing agents

10.6. Hazardous decomposition products

Substance	Condition
None known.	

Refer to section 5.2 for hazardous decomposition products during combustion.

SECTION 11: Toxicological information

The information below may not be consistent with the material classification in Section 2 if specific ingredient classifications are mandated by a competent authority. In addition, toxicological data on ingredients may not be reflected in the material classification and/or the signs and symptoms of exposure, because an ingredient may be present below the threshold for labeling, an ingredient may not be available for exposure, or the data may not be relevant to the material as a whole.

11.1. Information on Toxicological effects

Signs and Symptoms of Exposure

Based on test data and/or information on the components, this material may produce the following health effects:

Inhalation:
Intentional concentration and inhalation may be harmful or fatal.

Simple Asphyxiation: Signs/symptoms may include increased heart rate, rapid respirations, drowsiness, headache, incoordination, altered judgement, nausea, vomiting, lethargy, seizures, coma, and may be fatal.

Respiratory Tract Irritation: Signs/symptoms may include cough, sneezing, nasal discharge, headache, hoarseness, and nose and throat pain.

May cause target organ effects after inhalation.

Skin Contact:
Dermal Defatting: Signs/symptoms may include localized redness, itching, drying and cracking of skin.

Eye Contact:
Severe Eye Irritation: Signs/symptoms may include significant redness, swelling, pain, tearing, cloudy appearance of the cornea, and impaired vision.

Ingestion:
Gastrointestinal Irritation: Signs/symptoms may include abdominal pain, stomach upset, nausea, vomiting and diarrhea.

May cause target organ effects after ingestion.

Target Organ Effects:

Single exposure may cause:
Central Nervous System (CNS) Depression: Signs/symptoms may include headache, dizziness, drowsiness, incoordination, nausea, slowed reaction time, slurred speech, giddiness, and unconsciousness.

Single exposure, above recommended guidelines, may cause:
Cardiac Sensitization: Signs/symptoms may include irregular heartbeat (arrhythmia), faintness, chest pain, and may be fatal.

Reproductive/Developmental Toxicity:
Contains a chemical or chemicals which can cause birth defects or other reproductive harm.

Toxicological Data
If a component is disclosed in section 3 but does not appear in a table below, either no data are available for that endpoint or the data are not sufficient for classification.

Acute Toxicity

Name	Route	Species	Value
Overall product	Dermal		No data available; calculated ATE > 5,000 mg/kg
Overall product	Ingestion		No data available; calculated ATE > 5,000 mg/kg
Propane	Inhalation-Gas (4 hours)	Rat	LC50 > 200,000 ppm
Acetone	Dermal	Rabbit	LD50 > 15,688 mg/kg
Acetone	Inhalation-Vapor (4 hours)	Rat	LC50 76 mg/l
Acetone	Ingestion	Rat	LD50 5,800 mg/kg
Cyclohexane	Dermal	Rat	LD50 > 2,000 mg/kg
Cyclohexane	Inhalation-Vapor (4 hours)	Rat	LC50 > 32.9 mg/l
Cyclohexane	Ingestion	Rat	LD50 6,200 mg/kg
Petroleum distillates	Dermal	Rabbit	LD50 > 3,160 mg/kg

Petroleum distillates	Inhalation-Vapor (4 hours)	Rat	LC50 > 14.7 mg/l
Petroleum distillates	Ingestion	Rat	LD50 > 5,000 mg/kg
Non-volatile components (N.J.T.S. Registry No. 04499600-6433P)	Ingestion		LD50 estimated to be 2,000 - 5,000 mg/kg
Hexane	Dermal	Rabbit	LD50 > 2,000 mg/kg
Hexane	Inhalation-Vapor (4 hours)	Rat	LC50 170 mg/l
Hexane	Ingestion	Rat	LD50 > 28,700 mg/kg

ATE = acute toxicity estimate

Skin Corrosion/Irritation

Name	Species	Value
Propane	Rabbit	Minimal irritation
Acetone	Mouse	Minimal irritation
Cyclohexane	Rabbit	Mild irritant
Petroleum distillates	Rabbit	Irritant
Non-volatile components (N.J.T.S. Registry No. 04499600-6433P)		Minimal irritation
Hexane	Human and animal	Mild irritant

Serious Eye Damage/Irritation

Name	Species	Value
Propane	Rabbit	Mild irritant
Acetone	Rabbit	Severe irritant
Cyclohexane	Rabbit	Mild irritant
Petroleum distillates	Rabbit	Mild irritant
Hexane	Rabbit	Mild irritant

Skin Sensitization

Name	Species	Value
Petroleum distillates	Guinea pig	Not sensitizing
Hexane	Human	Not sensitizing

Respiratory Sensitization

Name	Species	Value

Germ Cell Mutagenicity

Name	Route	Value
Propane	In Vitro	Not mutagenic
Acetone	In vivo	Not mutagenic
Acetone	In Vitro	Some positive data exist, but the data are not sufficient for classification
Cyclohexane	In Vitro	Not mutagenic
Cyclohexane	In vivo	Some positive data exist, but the data are not sufficient for classification
Petroleum distillates	In Vitro	Not mutagenic
Hexane	In Vitro	Not mutagenic
Hexane	In vivo	Not mutagenic

Carcinogenicity

Name	Route	Species	Value
Acetone	Not Specified	Multiple animal species	Not carcinogenic
Petroleum distillates	Inhalation	Mouse	Some positive data exist, but the data are not sufficient for classification
Hexane	Dermal	Mouse	Not carcinogenic
Hexane	Inhalation	Mouse	Some positive data exist, but the data are not sufficient for classification

Reproductive Toxicity

Reproductive and/or Developmental Effects

Name	Route	Value	Species	Test Result	Exposure Duration
Acetone	Ingestion	Not toxic to female reproduction	Mouse	NOAEL 11,298 mg/kg/day	13 weeks
Acetone	Ingestion	Some positive male reproductive data exist, but the data are not sufficient for classification	Rat	NOAEL 1,700 mg/kg/day	13 weeks
Acetone	Inhalation	Some positive developmental data exist, but the data are not sufficient for classification	Rat	NOAEL 5.2 mg/l	during organogenesis
Cyclohexane	Inhalation	Not toxic to female reproduction	Rat	NOAEL 24 mg/l	2 generation
Cyclohexane	Inhalation	Not toxic to male reproduction	Rat	NOAEL 24 mg/l	2 generation
Cyclohexane	Inhalation	Some positive developmental data exist, but the data are not sufficient for classification	Rat	NOAEL 6.9 mg/l	2 generation
Hexane	Ingestion	Not toxic to development	Mouse	NOAEL 2,200 mg/kg/day	during organogenesis
Hexane	Inhalation	Some positive developmental data exist, but the data are not sufficient for classification	Rat	NOAEL 0.7 mg/l	during gestation
Hexane	Ingestion	Toxic to male reproduction	Rat	NOAEL 1,140 mg/kg/day	90 days
Hexane	Inhalation	Toxic to male reproduction	Rat	LOAEL 3.52 mg/l	28 days

Target Organ(s)

Specific Target Organ Toxicity - single exposure

Name	Route	Target Organ(s)	Value	Species	Test Result	Exposure Duration
Propane	Inhalation	cardiac sensitization	Causes damage to organs	Human	NOAEL Not available	
Propane	Inhalation	central nervous system depression	May cause drowsiness or dizziness	Human	NOAEL Not available	
Propane	Inhalation	respiratory irritation	All data are negative	Human	NOAEL Not available	
Acetone	Inhalation	central nervous system depression	May cause drowsiness or dizziness	Human	NOAEL Not available	
Acetone	Inhalation	respiratory irritation	Some positive data exist, but the data are not sufficient for classification	Human	NOAEL Not available	
Acetone	Inhalation	immune system	Some positive data exist, but the data are not sufficient for classification	Human	NOAEL 1.19 mg/l	6 hours
Acetone	Inhalation	liver	Some positive data exist, but the data are not sufficient for classification	Guinea pig	NOAEL Not available	
Acetone	Ingestion	central nervous system depression	May cause drowsiness or dizziness	Human	NOAEL Not available	poisoning and/or abuse
Cyclohexane	Inhalation	central nervous system depression	May cause drowsiness or dizziness	Human and animal	NOAEL Not available	
Cyclohexane	Inhalation	respiratory irritation	Some positive data exist, but the data are not sufficient for classification	Human and animal	NOAEL Not available	
Petroleum distillates	Inhalation	central nervous system depression	May cause drowsiness or dizziness		NOAEL Not available	

Petroleum distillates	Inhalation	respiratory irritation	Some positive data exist, but the data are not sufficient for classification		NOAEL Not available	
Hexane	Inhalation	central nervous system depression	May cause drowsiness or dizziness	Human	NOAEL Not available	not available
Hexane	Inhalation	respiratory irritation	Some positive data exist, but the data are not sufficient for classification	Rabbit	NOAEL Not available	8 hours
Hexane	Inhalation	respiratory system	Some positive data exist, but the data are not sufficient for classification	Rat	NOAEL 24.6 mg/l	8 hours

Specific Target Organ Toxicity - repeated exposure

Name	Route	Target Organ(s)	Value	Species	Test Result	Exposure Duration
Acetone	Dermal	eyes	Some positive data exist, but the data are not sufficient for classification	Guinea pig	NOAEL Not available	3 weeks
Acetone	Inhalation	hematopoietic system	Some positive data exist, but the data are not sufficient for classification	Human	NOAEL 3 mg/l	6 weeks
Acetone	Inhalation	immune system	Some positive data exist, but the data are not sufficient for classification	Human	NOAEL 1.19 mg/l	6 days
Acetone	Inhalation	kidney and/or bladder	Some positive data exist, but the data are not sufficient for classification	Guinea pig	NOAEL 119 mg/l	not available
Acetone	Inhalation	heart | liver	All data are negative	Rat	NOAEL 45 mg/l	8 weeks
Acetone	Ingestion	kidney and/or bladder	Some positive data exist, but the data are not sufficient for classification	Rat	NOAEL 900 mg/kg/day	13 weeks
Acetone	Ingestion	heart	Some positive data exist, but the data are not sufficient for classification	Rat	NOAEL 2,500 mg/kg/day	13 weeks
Acetone	Ingestion	hematopoietic system	Some positive data exist, but the data are not sufficient for classification	Rat	NOAEL 200 mg/kg/day	13 weeks
Acetone	Ingestion	liver	Some positive data exist, but the data are not sufficient for classification	Mouse	NOAEL 3,896 mg/kg/day	14 days
Acetone	Ingestion	eyes	All data are negative	Rat	NOAEL 3,400 mg/kg/day	13 weeks
Acetone	Ingestion	respiratory system	All data are negative	Rat	NOAEL 2,500 mg/kg/day	13 weeks
Acetone	Ingestion	muscles	All data are negative	Rat	NOAEL 2,500 mg/kg	13 weeks
Acetone	Ingestion	skin | bone, teeth, nails, and/or hair	All data are negative	Mouse	NOAEL 11,298 mg/kg/day	13 weeks
Cyclohexane	Inhalation	liver	Some positive data exist, but the data are not sufficient for classification	Rat	NOAEL 24 mg/l	90 days
Cyclohexane	Inhalation	auditory system	Some positive data exist, but the data are not sufficient for classification	Rat	NOAEL 1.7 mg/l	90 days
Cyclohexane	Inhalation	kidney and/or bladder	Some positive data exist, but the data are not sufficient for classification	Rabbit	NOAEL 2.7 mg/l	10 weeks
Cyclohexane	Inhalation	hematopoietic system	Some positive data exist, but the data are not sufficient for classification	Mouse	NOAEL 24 mg/l	14 weeks
Cyclohexane	Inhalation	peripheral nervous system	All data are negative	Rat	NOAEL 8.6 mg/l	30 weeks
Hexane	Inhalation	peripheral nervous	Causes damage to organs	Human	NOAEL Not	occupational

		system	through prolonged or repeated exposure		available	exposure
Hexane	Inhalation	respiratory system	Some positive data exist, but the data are not sufficient for classification	Mouse	LOAEL 1.76 mg/l	13 weeks
Hexane	Inhalation	liver	Some positive data exist, but the data are not sufficient for classification	Rat	NOAEL Not available	6 months
Hexane	Inhalation	kidney and/or bladder	Some positive data exist, but the data are not sufficient for classification	Rat	LOAEL 1.76 mg/l	6 months
Hexane	Inhalation	hematopoietic system	Some positive data exist, but the data are not sufficient for classification	Mouse	NOAEL 35.2 mg/l	13 weeks
Hexane	Inhalation	auditory system | immune system | eyes	Some positive data exist, but the data are not sufficient for classification	Human	NOAEL Not available	occupational exposure
Hexane	Inhalation	heart | skin | endocrine system	All data are negative	Rat	NOAEL 1.76 mg/l	6 months
Hexane	Ingestion	peripheral nervous system	Some positive data exist, but the data are not sufficient for classification	Rat	NOAEL 1,140 mg/kg/day	90 days
Hexane	Ingestion	endocrine system | hematopoietic system | liver | immune system | kidney and/or bladder	Some positive data exist, but the data are not sufficient for classification	Rat	NOAEL Not available	13 weeks

Aspiration Hazard

Name	Value
Cyclohexane	Aspiration hazard
Petroleum distillates	Aspiration hazard
Hexane	Aspiration hazard

Please contact the address or phone number listed on the first page of the SDS for additional toxicological information on this material and/or its components.

SECTION 12: Ecological information

Ecotoxicological information

Please contact the address or phone number listed on the first page of the SDS for additional ecotoxicological information on this material and/or its components.

Chemical fate information

Please contact the address or phone number listed on the first page of the SDS for additional chemical fate information on this material and/or its components.

SECTION 13: Disposal considerations

13.1. Disposal methods

Dispose of contents/ container in accordance with the local/regional/national/international regulations.

Dispose of waste product in a permitted industrial waste facility. Facility must be capable of handling aerosol cans.

EPA Hazardous Waste Number (RCRA): D001 (Ignitable)

SECTION 14: Transport Information

For Transport Information, please visit **http://3M.com/Transportinfo** or call 1-800-364-3577 or 651-737-6501.

SECTION 15: Regulatory information

15.1. US Federal Regulations
Contact 3M for more information.

311/312 Hazard Categories:

Fire Hazard - Yes Pressure Hazard - Yes Reactivity Hazard - No Immediate Hazard - Yes Delayed Hazard - Yes

Section 313 Toxic Chemicals subject to the reporting requirements of that section and 40 CFR part 372 (EPCRA):

Ingredient	C.A.S. No	% by Wt
Cyclohexane	110-82-7	10 - 20

15.2. State Regulations
Contact 3M for more information.

15.3. Chemical Inventories
The components of this product are in compliance with the chemical notification requirements of TSCA.

Contact 3M for more information.

15.4. International Regulations
Contact 3M for more information.

This SDS has been prepared to meet the U.S. OSHA Hazard Communication Standard, 29 CFR 1910.1200.

SECTION 16: Other information

NFPA Hazard Classification
Health: 2 **Flammability:** 4 **Instability:** 0 **Special Hazards:** None
Aerosol Storage Code: 3

National Fire Protection Association (NFPA) hazard ratings are designed for use by emergency response personnel to address the hazards that are presented by short-term, acute exposure to a material under conditions of fire, spill, or similar emergencies. Hazard ratings are primarily based on the inherent physical and toxic properties of the material but also include the toxic properties of combustion or decomposition products that are known to be generated in significant quantities.

HMIS Hazard Classification
Health: *2 **Flammability:** 4 **Physical Hazard:** 0 **Personal Protection:** X - See PPE section.

Hazardous Material Identification System (HMIS® III) hazard ratings are designed to inform employees of chemical hazards in the workplace. These ratings are based on the inherent properties of the material under expected conditions of normal use and are not intended for use in emergency situations. HMIS® III ratings are to be used with a fully implemented HMIS® III program. HMIS® is a registered mark of the American Coatings Association (ACA).

Document Group:	16-3472-4	**Version Number:**	37.00
Issue Date:	09/11/14	**Supercedes Date:**	04/19/12

DISCLAIMER: The information in this Safety Data Sheet (SDS) is believed to be correct as of the date issued. 3M MAKES

NO WARRANTIES, EXPRESSED OR IMPLIED, INCLUDING, BUT NOT LIMITED TO, ANY IMPLIED WARRANTY OF MERCHANTABILITY OR FITNESS FOR A PARTICULAR PURPOSE OR COURSE OF PERFORMANCE OR USAGE OF TRADE. User is responsible for determining whether the 3M product is fit for a particular purpose and suitable for user's method of use or application. Given the variety of factors that can affect the use and application of a 3M product, some of which are uniquely within the user's knowledge and control, it is essential that the user evaluate the 3M product to determine whether it is fit for a particular purpose and suitable for user's method of use or application.

3M provides information in electronic form as a service to its customers. Due to the remote possibility that electronic transfer may have resulted in errors, omissions or alterations in this information, 3M makes no representations as to its completeness or accuracy. In addition, information obtained from a database may not be as current as the information in the SDS available directly from 3M

3M USA SDSs are available at www.3M.com

Safety Data Sheet

24 Hour Emergency Phone Numbers
Medical/Poison Control:
In U.S.: Call 1-800-222-1222

Outside U.S.: Call your local poison control center

Transportation/National Response Center:

1-800-535-5053
1-352-323-3500

NOTE: The National ResponseCenter emergency numbers to be used only in the event of chemical emergencies involving a spill, leak, fire, exposure or accident involving chemicals.

IMPORTANT: Provide this information to employees, customers, and users of this product. Read this SDS before handling or disposing of this product. This product is covered by the OSHA Hazard Communication Standard and this document has been prepared in accordance with requirements of this standard. All abbreviated terms used in this MSDS are further described in Section 16.

1. Identification

This Material Safety Data Sheet is available in American Spanish upon request.
Los Datos de Serguridad del Producto pueden obtenerse en Espanol si lo riquiere.

Product Name:	Alex Plus Clear	**Revision Date:**	6/19/2015
Product UPC Number:	18071	**Supercedes Date:**	7/10/2014
Product Use/Class:	Caulking Compound	**SDS No:**	00010019001
Manufacturer:	DAP Products Inc. 2400 Boston Street Suite 200 Baltimore, MD 21224-4723 888-327-8477 (non - emergency matters)		
Preparer:	Regulatory Department		

2. Hazards Identification

EMERGENCY OVERVIEW: Under normal use conditions, this product is not expected to cause adverse health effects. This product contains ethylene glycol.

GHS Classification

Not a hazardous substance or mixture.

Symbol(s) of Product

None

Signal Word

Not a hazardous substance or mixture.

3. Composition/Information on Ingredients

Chemical Name	CAS-No.	Wt. %	GHS Symbols	GHS Statements
White mineral oil	8042-47-5	10-25	GHS03-GHS07-GHS08	H270-304-312

Ethylene glycol	107-21-1	1.0-2.5	GHS03-GHS06	H270-331
Amorphous silica	112945-52-5	1.0-2.5	GHS03-GHS07	H270-315-319-332-335
Poly(oxy-1,2-ethanediyl), α-sulfo-ω-(nonylphenoxy)-, branched, sodium salt	68891-39-4	0.1-1.0	GHS03	H270

The text for GHS Hazard Statements shown above (if any) is given in the "Other information" Section.

4. First-aid Measures

FIRST AID - INHALATION: Material is not likely to present an inhalation hazard at ambient conditions. If you experience difficulty in breathing, leave the area to obtain fresh air. If continued difficulty is experienced, get medical attention immediately.

FIRST AID - SKIN CONTACT: No health hazards are known to exist. In case of contact, wash skin immediately with soap and water.

FIRST AID - EYE CONTACT: In case of contact, immediately flush eyes with large quantities of water for at least 15 minutes until irritation subsides. Get medical attention immediately.

FIRST AID - INGESTION: If swallowed, DO NOT INDUCE VOMITING. Get medical attention immediately.

5. Fire-fighting Measures

UNUSUAL FIRE AND EXPLOSION HAZARDS: None known.

SPECIAL FIREFIGHTING PROCEDURES: Wear self-contained breathing apparatus pressure-demand (NIOSH approved or equivalent) and full protective gear. Use water spray to cool exposed surfaces.

EXTINGUISHING MEDIA: Carbon Dioxide, Dry Chemical, Foam, Water Fog

6. Accidental Release Measures

ENVIRONMENTAL MEASURES: No Information

STEPS TO BE TAKEN IF MATERIAL IS RELEASED OR SPILLED: Contain spilled material and remove with inert absorbent. Dispose of contaminated absorbent, container and unused contents in accordance with local, state and federal regulations. Scrape up dried material and place into containers. Use personal protective equipment as necessary. In case of spillage, absorb with inert material and dispose of in accordance with applicable regulations.

7. Handling and Storage

HANDLING: KEEP OUT OF REACH OF CHILDREN!DO NOT TAKE INTERNALLY. Use only with adequate ventilation. Ensure fresh air entry during application and drying. Wash thoroughly after handling.

STORAGE: Avoid excessive heat and freezing. Do not store at temperatures above 120 degrees F. Store away from caustics and oxidizers.

8. Exposure Controls/Personal Protection

Ingredients with Occupational Exposure Limits

Chemical Name	ACGIH TLV-TWA	ACGIH-TLV STEL	OSHA PEL-TWA	OSHA PEL-CEILING
White mineral oil	N.E.	N.E.	N.E.	N.E.
Ethylene glycol	N.E.	N.E.	N.E.	N.E.
Amorphous silica	N.E.	N.E.	N.E.	N.E.
Poly(oxy-1,2-ethanediyl), α-sulfo-ω-(nonylphenoxy)-, branched, sodium salt	N.E.	N.E.	N.E.	N.E.

Further Advice: MEL = Maximum Exposure Limit OES = Occupational Exposure Standard SUP = Supplier's Recommendation Sk = Skin Sensitizer N.E. = Not Established

Personal Protection

RESPIRATORY PROTECTION: No personal respiratory protective equipment normally required.

SKIN PROTECTION: Rubber gloves.

EYE PROTECTION: Goggles or safety glasses with side shields.

OTHER PROTECTIVE EQUIPMENT: Not required under normal use.

HYGIENIC PRACTICES: Wash hands before breaks and at the end of workday. Remove and wash contaminated clothing before re-use.

9. Physical and Chemical Properties

Appearance:	White (changes to clear as it cures)	**Physical State:**	Paste
Odor:	Very Slight Ammonia	**Odor Threshold:**	Not Established
Density, g/cm3:	1.03 - 1.04	**pH:**	Between 7.0 and 12.0
Freeze Point, °C:	Not Established	**Viscosity (mPa.s):**	Not Established
Solubility in Water:	Not Established	**Partition Coeff., n-octanol/water:**	Not Established
Decomposition Temperature, °C:	Not Established	**Explosive Limits, %:**	N.I. - N.I.
Boiling Range, °C:	N.I. - N.I.	**Auto-Ignition Temperature, °C**	Not Established
Minimum Flash Point, °C:	93.3	**Vapor Pressure, mmHg:**	No Information
Evaporation Rate:	Slower Than n-Butyl Acetate	**Flash Method:**	Seta Closed Cup
Vapor Density:	Heavier Than Air		
Combustibility:	Does not support combustion		

(See "Other information" Section for abbreviation legend)
(If product is an aerosol, the flash point stated above is that of the propellant.)

10. Stability and Reactivity

STABILITY: Stable under recommended storage conditions.

CONDITIONS TO AVOID: Excessive heat and freezing.

INCOMPATIBILITY: Incompatible with strong bases and oxidizing agents.

HAZARDOUS DECOMPOSITION PRODUCTS: Normal decomposition products, i.e., COx, NOx.

11. Toxicological Information

EFFECT OF OVEREXPOSURE - INHALATION: Under normal use conditions, this product is not expected to cause adverse health effects. Inhalation of vapors in high concentration may cause mild irritation of respiratory system (nose, mouth, mucous membranes).

EFFECT OF OVEREXPOSURE - SKIN CONTACT: Under normal use conditions, this product is not expected to cause adverse health effects. Prolonged or repeated contact with skin may cause mild irritation.

EFFECT OF OVEREXPOSURE - EYE CONTACT: Under normal use conditions, this product is not expected to cause adverse health effects. Direct eye contact may cause irritation.

EFFECT OF OVEREXPOSURE - INGESTION: Under normal use conditions, this product is not expected to cause adverse health effects. Single dose oral toxicity is very low. Amounts ingested incidental to industrial handling are not likely to cause injury; however,

ingestion of large amounts may cause injury. Ingestion of ethylene glycol can cause gastrointestinal irritation, nausea, vomiting, diarrhea and if ingested in sufficient quantities, death.

CARCINOGENICITY: No Information

PRIMARY ROUTE(S) OF ENTRY: Inhalation, Skin Contact

Acute Toxicity Values
The acute effects of this product have not been tested. Data on individual components are tabulated below

CAS-No.	Chemical Name	Oral LD50	Dermal LD50	Vapor LC50
8042-47-5	White mineral oil	>5000 mg/kg Rat	2000 mg/kg Rabbit	>20 mg/L
107-21-1	Ethylene glycol	4000 mg/kg Rat	9530 mg/kg Rabbit	> 2.5 mg/L Rat
112945-52-5	Amorphous silica	>3300 mg/kg Rat	>2000 mg/kg Rabbit	>20 mg/L
68891-39-4	Poly(oxy-1,2-ethanediyl), α-sulfo-ω-(nonylphenoxy)-, branched, sodium salt	N.I.	N.I.	N.I.

N.I. = No Information

12. Ecological Information

ECOLOGICAL INFORMATION: Ecological injuries are not known or expected under normal use.

13. Disposal Information

DISPOSAL INFORMATION: This product does not meet the definition of a hazardous waste according to U.S. EPA Hazardous Waste Management Regulation, 40 CFR Section 261. Dispose as hazardous waste according to all local, state, federal and provincial regulations. State and Local regulations/restrictions are complex and may differ from Federal regulations. Responsibility for proper waste disposal is with the owner of the waste.

14. Transport Information

SPECIAL TRANSPORT PRECAUTIONS: No Information

DOT UN/NA Number:	N.A.
DOT Proper Shipping Name:	Not Regulated.
DOT Technical Name:	N.A.
DOT Hazard Class:	N.A.
Hazard SubClass:	N.A.
Packing Group:	N.A.

15. Regulatory Information

U.S. Federal Regulations:

CERCLA - SARA Hazard Category

This product has been reviewed according to the EPA 'Hazard Categories' promulgated under Sections 311 and 312 of the Superfund Amendment and Reauthorization Act of 1986 (SARA Title III) and is considered, under applicable definitions, to meet the following categories:

Acute Health Hazard, Chronic Health Hazard

SARA SECTION 313:

This product contains the following substances subject to the reporting requirements of Section 313 of Title III of the Superfund Amendment and Reauthorization Act of 1986 and 40 CFR part 372:

Chemical Name	CAS-No.
Ethylene glycol	107-21-1

TOXIC SUBSTANCES CONTROL ACT:

All ingredients in this product are either on TSCA inventory list, or otherwise exempt.
This product contains the following chemical substances subject to the reporting requirements of TSCA 12(B) if exported from the United States:

No TSCA 12(b) components exist in this product.

CALIFORNIA PROPOSITION 65 CARCINOGENS

WARNING: This product contains chemicals known to the State of California to cause cancer.

CALIFORNIA PROPOSITION 65 REPRODUCTIVE TOXINS

This product does not contain any chemicals known to the State of California to cause birth defects or other reproductive harm.

International Regulations: As follows -

CANADIAN WHMIS:

This MSDS has been prepared in compliance with Controlled Product Regulations except for the use of the 16 headings.

WHMIS Class Consumer Commodity

16. Other Information

Revision Date: 6/19/2015 **Supersedes Date:** 7/10/2014

Reason for revision: HazCom2012/GHS Conversion

Datasheet produced by: Regulatory Department

HMIS Ratings:

Health:	1	**Flammability:**	0	**Reactivity:**	0	**Personal Protection:**	X

VOC Less Water Less Exempt Solvent, g/L 44.0

VOC Material, g/L: 26

VOC as Defined by California Consumer Product Regulation, Wt/Wt%: 0.1

Text for GHS Hazard Statements shown in Section 3 describing each ingredient:

H270	May cause or intensify fire; oxidiser.
H304	May be fatal if swallowed and enters airways.
H312	Harmful in contact with skin.
H315	Causes skin irritation.
H319	Causes serious eye irritation.
H331	Toxic if inhaled.
H332	Harmful if inhaled.
H335	May cause respiratory irritation.

Icons for GHS Pictograms shown in Section 3 describing each ingredient:

GHS03

GHS06

GHS07

GHS08

Legend: N.A. - Not Applicable, N.E. - Not Established, N.D. - Not Determined

DAP believes the data and statements contained herein are accurate as of the date hereof. They are offered in good faith as typical values and not as a product specification. NO WARRANTY OF MERCHANTABILITY, WARRANTY OF FITNESS FOR ANY PARTICULAR PURPOSE OR ANY OTHER WARRANTY, EXPRESS OR IMPLIED, IS MADE WITH REGARD TO THE INFORMATION HEREIN PROVIDED OR THE PRODUCT TO WHICH THE INFORMATION REFERS. Since thisdocument is intended only as a guide to the appropriate use and precautionary handling of the referenced product by a properly trained person, it is therefore the responsibility of the user to (i) review the recommendations with due consideration for the specific context of the intended use and (ii) determine if they are appropriate.

Safety Data Sheet

24 Hour Emergency Phone Numbers
Medical/Poison Control:
In U.S.: Call 1-800-222-1222

Outside U.S.: Call your local poison control center

Transportation/National Response Center:

1-800-535-5053
1-352-323-3500

NOTE: The National ResponseCenter emergency numbers to be used only in the event of chemical emergencies involving a spill, leak, fire, exposure or accident involving chemicals.

IMPORTANT: Provide this information to employees, customers, and users of this product. Read this SDS before handling or disposing of this product. This product is covered by the OSHA Hazard Communication Standard and this document has been prepared in accordance with requirements of this standard. All abbreviated terms used in this MSDS are further described in Section 16.

1. Identification

This Material Safety Data Sheet is available in American Spanish upon request.
Los Datos de Serguridad del Producto pueden obtenerse en Espanol si lo riquiere.

Product Name:	Alex Plus Clear	**Revision Date:**	6/19/2015
Product UPC Number:	18071	**Supercedes Date:**	7/10/2014
Product Use/Class:	Caulking Compound	**SDS No:**	00010019001
Manufacturer:	DAP Products Inc. 2400 Boston Street Suite 200 Baltimore, MD 21224-4723 888-327-8477 (non - emergency matters)		
Preparer:	Regulatory Department		

2. Hazards Identification

EMERGENCY OVERVIEW: Under normal use conditions, this product is not expected to cause adverse health effects. This product contains ethylene glycol.

GHS Classification
Not a hazardous substance or mixture.

Symbol(s) of Product

None

Signal Word
Not a hazardous substance or mixture.

3. Composition/Information on Ingredients

Chemical Name	CAS-No.	Wt. %	GHS Symbols	GHS Statements
White mineral oil	8042-47-5	10-25	GHS03-GHS07-GHS08	H270-304-312

Ethylene glycol	107-21-1	1.0-2.5	GHS03-GHS06	H270-331
Amorphous silica	112945-52-5	1.0-2.5	GHS03-GHS07	H270-315-319-332-335
Poly(oxy-1,2-ethanediyl), α-sulfo-ω-(nonylphenoxy)-, branched, sodium salt	68891-39-4	0.1-1.0	GHS03	H270

The text for GHS Hazard Statements shown above (if any) is given in the "Other information" Section.

4. First-aid Measures

FIRST AID - INHALATION: Material is not likely to present an inhalation hazard at ambient conditions. If you experience difficulty in breathing, leave the area to obtain fresh air. If continued difficulty is experienced, get medical attention immediately.

FIRST AID - SKIN CONTACT: No health hazards are known to exist. In case of contact, wash skin immediately with soap and water.

FIRST AID - EYE CONTACT: In case of contact, immediately flush eyes with large quantities of water for at least 15 minutes until irritation subsides. Get medical attention immediately.

FIRST AID - INGESTION: If swallowed, DO NOT INDUCE VOMITING. Get medical attention immediately.

5. Fire-fighting Measures

UNUSUAL FIRE AND EXPLOSION HAZARDS: None known.

SPECIAL FIREFIGHTING PROCEDURES: Wear self-contained breathing apparatus pressure-demand (NIOSH approved or equivalent) and full protective gear. Use water spray to cool exposed surfaces.

EXTINGUISHING MEDIA: Carbon Dioxide, Dry Chemical, Foam, Water Fog

6. Accidental Release Measures

ENVIRONMENTAL MEASURES: No Information

STEPS TO BE TAKEN IF MATERIAL IS RELEASED OR SPILLED: Contain spilled material and remove with inert absorbent. Dispose of contaminated absorbent, container and unused contents in accordance with local, state and federal regulations. Scrape up dried material and place into containers. Use personal protective equipment as necessary. In case of spillage, absorb with inert material and dispose of in accordance with applicable regulations.

7. Handling and Storage

HANDLING: KEEP OUT OF REACH OF CHILDREN!DO NOT TAKE INTERNALLY. Use only with adequate ventilation. Ensure fresh air entry during application and drying. Wash thoroughly after handling.

STORAGE: Avoid excessive heat and freezing. Do not store at temperatures above 120 degrees F. Store away from caustics and oxidizers.

8. Exposure Controls/Personal Protection

Ingredients with Occupational Exposure Limits

Chemical Name	ACGIH TLV-TWA	ACGIH-TLV STEL	OSHA PEL-TWA	OSHA PEL-CEILING
White mineral oil	N.E.	N.E.	N.E.	N.E.
Ethylene glycol	N.E.	N.E.	N.E.	N.E.
Amorphous silica	N.E.	N.E.	N.E.	N.E.
Poly(oxy-1,2-ethanediyl), α-sulfo-ω-(nonylphenoxy)-, branched, sodium salt	N.E.	N.E.	N.E.	N.E.

Further Advice: MEL = Maximum Exposure Limit OES = Occupational Exposure Standard SUP = Supplier's Recommendation Sk = Skin Sensitizer N.E. = Not Established

Personal Protection

RESPIRATORY PROTECTION: No personal respiratory protective equipment normally required.

SKIN PROTECTION: Rubber gloves.

EYE PROTECTION: Goggles or safety glasses with side shields.

OTHER PROTECTIVE EQUIPMENT: Not required under normal use.

HYGIENIC PRACTICES: Wash hands before breaks and at the end of workday. Remove and wash contaminated clothing before re-use.

9. Physical and Chemical Properties

Appearance:	White (changes to clear as it cures)	**Physical State:**	Paste
Odor:	Very Slight Ammonia	**Odor Threshold:**	Not Established
Density, g/cm3:	1.03 - 1.04	**pH:**	Between 7.0 and 12.0
Freeze Point, °C:	Not Established	**Viscosity (mPa.s):**	Not Established
Solubility in Water:	Not Established	**Partition Coeff., n-octanol/water:**	Not Established
Decomposition Temperature, °C:	Not Established	**Explosive Limits, %:**	N.I. - N.I.
Boiling Range, °C:	N.I. - N.I.	**Auto-Ignition Temperature, °C**	Not Established
Minimum Flash Point, °C:	93.3	**Vapor Pressure, mmHg:**	No Information
Evaporation Rate:	Slower Than n-Butyl Acetate	**Flash Method:**	Seta Closed Cup
Vapor Density:	Heavier Than Air		
Combustibility:	Does not support combustion		

(See "Other information" Section for abbreviation legend)
(If product is an aerosol, the flash point stated above is that of the propellant.)

10. Stability and Reactivity

STABILITY: Stable under recommended storage conditions.

CONDITIONS TO AVOID: Excessive heat and freezing.

INCOMPATIBILITY: Incompatible with strong bases and oxidizing agents.

HAZARDOUS DECOMPOSITION PRODUCTS: Normal decomposition products, i.e., COx, NOx.

11. Toxicological Information

EFFECT OF OVEREXPOSURE - INHALATION: Under normal use conditions, this product is not expected to cause adverse health effects. Inhalation of vapors in high concentration may cause mild irritation of respiratory system (nose, mouth, mucous membranes).

EFFECT OF OVEREXPOSURE - SKIN CONTACT: Under normal use conditions, this product is not expected to cause adverse health effects. Prolonged or repeated contact with skin may cause mild irritation.

EFFECT OF OVEREXPOSURE - EYE CONTACT: Under normal use conditions, this product is not expected to cause adverse health effects. Direct eye contact may cause irritation.

EFFECT OF OVEREXPOSURE - INGESTION: Under normal use conditions, this product is not expected to cause adverse health effects. Single dose oral toxicity is very low. Amounts ingested incidental to industrial handling are not likely to cause injury; however,

ingestion of large amounts may cause injury. Ingestion of ethylene glycol can cause gastrointestinal irritation, nausea, vomiting, diarrhea and if ingested in sufficient quantities, death.

CARCINOGENICITY: No Information

PRIMARY ROUTE(S) OF ENTRY: Inhalation, Skin Contact

Acute Toxicity Values
The acute effects of this product have not been tested. Data on individual components are tabulated below

CAS-No.	Chemical Name	Oral LD50	Dermal LD50	Vapor LC50
8042-47-5	White mineral oil	>5000 mg/kg Rat	2000 mg/kg Rabbit	>20 mg/L
107-21-1	Ethylene glycol	4000 mg/kg Rat	9530 mg/kg Rabbit	> 2.5 mg/L Rat
112945-52-5	Amorphous silica	>3300 mg/kg Rat	>2000 mg/kg Rabbit	>20 mg/L
68891-39-4	Poly(oxy-1,2-ethanediyl), α-sulfo-ω-(nonylphenoxy)-, branched, sodium salt	N.I.	N.I.	N.I.

N.I. = No Information

12. Ecological Information

ECOLOGICAL INFORMATION: Ecological injuries are not known or expected under normal use.

13. Disposal Information

DISPOSAL INFORMATION: This product does not meet the definition of a hazardous waste according to U.S. EPA Hazardous Waste Management Regulation, 40 CFR Section 261. Dispose as hazardous waste according to all local, state, federal and provincial regulations. State and Local regulations/restrictions are complex and may differ from Federal regulations. Responsibility for proper waste disposal is with the owner of the waste.

14. Transport Information

SPECIAL TRANSPORT PRECAUTIONS: No Information

DOT UN/NA Number:	N.A.
DOT Proper Shipping Name:	Not Regulated.
DOT Technical Name:	N.A.
DOT Hazard Class:	N.A.
Hazard SubClass:	N.A.
Packing Group:	N.A.

15. Regulatory Information

U.S. Federal Regulations:

CERCLA - SARA Hazard Category

This product has been reviewed according to the EPA 'Hazard Categories' promulgated under Sections 311 and 312 of the Superfund Amendment and Reauthorization Act of 1986 (SARA Title III) and is considered, under applicable definitions, to meet the following categories:

Acute Health Hazard, Chronic Health Hazard

SARA SECTION 313:

This product contains the following substances subject to the reporting requirements of Section 313 of Title III of the Superfund Amendment and Reauthorization Act of 1986 and 40 CFR part 372:

Chemical Name	CAS-No.
Ethylene glycol	107-21-1

TOXIC SUBSTANCES CONTROL ACT:

All ingredients in this product are either on TSCA inventory list, or otherwise exempt.
This product contains the following chemical substances subject to the reporting requirements of TSCA 12(B) if exported from the United States:

No TSCA 12(b) components exist in this product.

CALIFORNIA PROPOSITION 65 CARCINOGENS

WARNING: This product contains chemicals known to the State of California to cause cancer.

CALIFORNIA PROPOSITION 65 REPRODUCTIVE TOXINS

This product does not contain any chemicals known to the State of California to cause birth defects or other reproductive harm.

International Regulations: As follows -

CANADIAN WHMIS:

This MSDS has been prepared in compliance with Controlled Product Regulations except for the use of the 16 headings.

WHMIS Class Consumer Commodity

16. Other Information

Revision Date: 6/19/2015 **Supersedes Date:** 7/10/2014

Reason for revision: HazCom2012/GHS Conversion

Datasheet produced by: Regulatory Department

HMIS Ratings:

Health:	1	**Flammability:**	0	**Reactivity:**	0	**Personal Protection:**	X

VOC Less Water Less Exempt Solvent, g/L 44.0

VOC Material, g/L: 26

VOC as Defined by California Consumer Product Regulation, Wt/Wt%: 0.1

Text for GHS Hazard Statements shown in Section 3 describing each ingredient:

H270	May cause or intensify fire; oxidiser.
H304	May be fatal if swallowed and enters airways.
H312	Harmful in contact with skin.
H315	Causes skin irritation.
H319	Causes serious eye irritation.
H331	Toxic if inhaled.
H332	Harmful if inhaled.
H335	May cause respiratory irritation.

Icons for GHS Pictograms shown in Section 3 describing each ingredient:

GHS03

GHS06

GHS07

GHS08

Legend: N.A. - Not Applicable, N.E. - Not Established, N.D. - Not Determined

DAP believes the data and statements contained herein are accurate as of the date hereof. They are offered in good faith as typical values and not as a product specification. NO WARRANTY OF MERCHANTABILITY, WARRANTY OF FITNESS FOR ANY PARTICULAR PURPOSE OR ANY OTHER WARRANTY, EXPRESS OR IMPLIED, IS MADE WITH REGARD TO THE INFORMATION HEREIN PROVIDED OR THE PRODUCT TO WHICH THE INFORMATION REFERS. Since thisdocument is intended only as a guide to the appropriate use and precautionary handling of the referenced product by a properly trained person, it is therefore the responsibility of the user to (i) review the recommendations with due consideration for the specific context of the intended use and (ii) determine if they are appropriate.

Technical Bulletin

2400 Boston Street, Suite 200, Baltimore, Maryland 21224
Phone: 410-675-2100 or 800-543-3840

Revised: 9/8/11

DAP® ALEX PLUS® Acrylic Latex Caulk Plus Silicone – Clear

- **Waterproof Seal**
- **Paintable**
- **Cured Caulk is Mold & Mildew Resistant**
- **Excellent Flexibility**
- **Easy Water Clean-Up**
- **Indoor/Outdoor Use**
- **Exceeds ASTM C834**

Packaging: 10.1 fl. oz. (300 mL) cartridge
Color: Clear
UPC Number: 7079818072, 7079818156, 7079818660, 7079811521, 7079811427, 7079874252, 7079818071

Company Identification:
Manufacturer: DAP Products Inc., 2400 Boston St., Ste. 200, Baltimore, Maryland 21224
Usage Information: Call 1-888-DAP-TIPS or visit dap.com & click on "Ask the Expert"
Order Information: 800-327-3339
Fax Number: 410-534-2650

Product Description:
ALEX PLUS® Acrylic Latex Caulk Plus Silicone is a professional quality caulking product formulated to last. It is an all-purpose adhesive caulk ideal for a wide variety of applications for interior and exterior use. ALEX PLUS® contains silicone, which allows for excellent adhesion and flexibility to resist expansion and contraction without cracking. It provides a waterproof seal and prevents air and moisture from passing through cracks and joints thereby improving energy efficiency. Cured caulk is mildew resistant. ALEX PLUS® is paintable with latex and oil-based paints. It is easy to use, easy to tool, low in odor, cleans up easily with soap and water and has a low VOC content.

Suggested Uses:
Ideal for caulking and sealing:

- *Windows and door frames*
- *Eaves*
- *Baseboards*
- *Pipes*
- *Molding*
- *Vents*
- *Siding and trim*
- *Corner Joints*
- *Ducts*

Adheres to:

- *Wood*
- *Brick*
- *Drywall*
- *Metal*
- *Painted Surfaces*
- *Glass*
- *Plaster*
- *Most common building materials*

Performance Characteristics:

- Exceeds ASTM C834.
- Contains silicone to improve adhesion and flexibility.
- Resists cracking and chalking.
- Tack-free in 30 minutes.

Surface Preparation & Application:

1. Surface must be clean, dry and free of old caulk, dirt, dust, debris and grease.
2. Cut nozzle at a 45° angle to desired bead size.
3. Puncture inner foil seal.
4. Load cartridge into caulking gun.
5. Fill gap with caulk, pushing caulk ahead of nozzle.
6. If necessary, smooth bead with finishing tool.
7. Clean up excess uncured caulk with a damp sponge before it skins over. Cured caulk must be cut or scraped away.
8. **Allow caulk to dry clear before painting with latex or oil-based paints.**
9. Reseal cartridge for storage and reuse.

For Best Results:

- *Apply in temperatures above 40ºF.*
- *Do not apply when rain or freezing temperatures are forecasted before full cure can occur.*
- *Do not use below waterline or for marine or automotive applications.*
- *Do not use for filling butt joints, surface defects, for tuck pointing or expansion joints.*
- *Joint size should not exceed 1/2" wide x 1/2" deep. If joint depth exceeds 1/2", use backer rod material.*
- ***Caulk applies white and dries clear in 7 – 14 days (depending on joint depth, temperature and humidity).***
- *Store away from extreme heat or cold.*

Physical & Chemical Characteristics:

Vehicle:	Siliconized Acrylic Polymer
Tooling Time:	10 minutes
Tack-Free Time:	30 minutes
Paintable:	Yes
Service Temperature Range (cured caulk):	-20ºF to 180ºF
Application Temperature Range:	40ºF to 100ºF
Coverage:	10.1 fl. oz. = 55 linear ft. at a 3/16" diameter bead (three average size doors or four average size windows)
Dynamic Joint Movement:	± 12%
Odor:	Very Mild
Consistency:	Smooth and Creamy
Volatile:	Water
Flash Point:	None
Specific Gravity:	1.02 ± 0.01
Solids:	54% ± 1% by weight
Weight per Gallon:	8.50 ± 0.05 lbs./gal.

Freeze Thaw Stability:	Passes 5 Cycles @ 0ºF
Shelf Life:	12 months
MSDS No:	00010019001

Clean Up:
Clean up excess uncured caulk with a damp sponge before it skins over. Wash hands with warm water and soap. Excess dried caulk must be cut or scraped away.

Safety:
See product label and Material Safety Data Sheet (MSDS) for safety information. You can request an MSDS by visiting our website at dap.com or by calling 1-888-DAP-TIPS.

35 Year Satisfaction Guarantee:
If product fails to perform when used as directed, return used container and sales receipt to DAP Products Inc., Technical Customer Service, 2400 Boston St., Ste. 200, Baltimore, MD 21224 for replacement product or sales price refund. DAP is not liable for incidental or consequential damages.

An RPM Company

Safety Data Sheet

24 Hour Emergency Phone Numbers
Medical/Poison Control:
In U.S.: Call 1-800-222-1222

Outside U.S.: Call your local poison control center

Transportation/National Response Center:

1-800-535-5053
1-352-323-3500

NOTE: The National ResponseCenter emergency numbers to be used only in the event of chemical emergencies involving a spill, leak, fire, exposure or accident involving chemicals.

IMPORTANT: Provide this information to employees, customers, and users of this product. Read this SDS before handling or disposing of this product. This product is covered by the OSHA Hazard Communication Standard and this document has been prepared in accordance with requirements of this standard. All abbreviated terms used in this MSDS are further described in Section 16.

1. Identification

This Material Safety Data Sheet is available in American Spanish upon request.
Los Datos de Serguridad del Producto pueden obtenerse en Espanol si lo riquiere.

Product Name:	Alex Plus Acrylic Latex Caulk Plus Silicone - All Colors	**Revision Date:**	6/19/2015
Product UPC Number:	11440, 18101, 18107, 18109, 18110, 18111, 18112, 18128, 18135, 18136, 18155, 18172	**Supercedes Date:**	3/27/2012
Product Use/Class:	Caulking Compound	**SDS No:**	00010002001
Manufacturer:	DAP Products Inc. 2400 Boston Street Suite 200 Baltimore, MD 21224-4723 888-327-8477 (non - emergency matters)		
Preparer:	Regulatory Department		

2. Hazards Identification

EMERGENCY OVERVIEW: Under normal use conditions, this product is not expected to cause adverse health effects.

GHS Classification

Not a hazardous substance or mixture.

Symbol(s) of Product

None

Signal Word

Not a hazardous substance or mixture.

3. Composition/Information on Ingredients

Chemical Name	CAS-No.	Wt. %	GHS Symbols	GHS Statements
Limestone	1317-65-3	50-75	GHS03	H270
Petroleum distillates	64741-88-4	1.0-2.5	GHS03-GHS06	H270-331

Diethylene glycol dibenzoate	120-55-8	1.0-2.5	GHS03-GHS07	H270-312
Titanium dioxide	13463-67-7	0.1-1.0	No Information	No Information
Quartz	14808-60-7	0.1-1.0	GHS03-GHS07	H270-302
Carbon black	1333-86-4	0.1-1.0	No Information	No Information

The text for GHS Hazard Statements shown above (if any) is given in the "Other information" Section.

4. First-aid Measures

FIRST AID - INHALATION: Material is not likely to present an inhalation hazard at ambient conditions. If you experience difficulty in breathing, leave the area to obtain fresh air. If continued difficulty is experienced, get medical attention immediately.

FIRST AID - SKIN CONTACT: No health hazards are known to exist. In case of contact, wash skin immediately with soap and water.

FIRST AID - EYE CONTACT: In case of contact, immediately flush eyes with large quantities of water for at least 15 minutes until irritation subsides. Get medical attention immediately.

FIRST AID - INGESTION: If swallowed, DO NOT INDUCE VOMITING. Get medical attention immediately.

5. Fire-fighting Measures

UNUSUAL FIRE AND EXPLOSION HAZARDS: None known.

SPECIAL FIREFIGHTING PROCEDURES: Wear self-contained breathing apparatus pressure-demand (NIOSH approved or equivalent) and full protective gear. Use water spray to cool exposed surfaces.

EXTINGUISHING MEDIA: Carbon Dioxide, Dry Chemical, Foam, Water Fog

6. Accidental Release Measures

ENVIRONMENTAL MEASURES: No Information

STEPS TO BE TAKEN IF MATERIAL IS RELEASED OR SPILLED: Contain spilled material and remove with inert absorbent. Dispose of contaminated absorbent, container and unused contents in accordance with local, state and federal regulations. Scrape up dried material and place into containers. Use personal protective equipment as necessary. In case of spillage, absorb with inert material and dispose of in accordance with applicable regulations.

7. Handling and Storage

HANDLING: KEEP OUT OF REACH OF CHILDREN!DO NOT TAKE INTERNALLY. Use only with adequate ventilation. Ensure fresh air entry during application and drying. Wash thoroughly after handling.

STORAGE: Avoid excessive heat and freezing. Do not store at temperatures above 120 degrees F. Store away from caustics and oxidizers.

8. Exposure Controls/Personal Protection

Ingredients with Occupational Exposure Limits

Chemical Name	ACGIH TLV-TWA	ACGIH-TLV STEL	OSHA PEL-TWA	OSHA PEL-CEILING
Limestone	N.E.	N.E.	15 mg/m3 TWA total dust, 5 mg/m3 TWA respirable fraction	N.E.
Petroleum distillates	N.E.	N.E.	N.E.	N.E.
Diethylene glycol dibenzoate	N.E.	N.E.	N.E.	N.E.
Titanium dioxide	10 mg/m3 TWA	N.E.	15 mg/m3 TWA total dust	N.E.
Quartz	0.025 mg/m3 TWA respirable fraction	N.E.	N.E.	N.E.
Carbon black	3 mg/m3 TWA inhalable fraction	N.E.	3.5 mg/m3 TWA	N.E.

Further Advice: MEL = Maximum Exposure Limit OES = Occupational Exposure Standard SUP = Supplier's Recommendation Sk = Skin Sensitizer N.E. = Not Established

Personal Protection

RESPIRATORY PROTECTION: No personal respiratory protective equipment normally required. National Institute for Occupational Safety and Health (NIOSH) has recommended that the permissible exposure limit be changed to 50 micrograms respirable free silica per cubic meter of air (0.05 mg/m3) as determined by a full shift sample up to 10-hour work shift.

SKIN PROTECTION: Rubber gloves.

EYE PROTECTION: Goggles or safety glasses with side shields.

OTHER PROTECTIVE EQUIPMENT: Not required under normal use.

HYGIENIC PRACTICES: Wash hands before breaks and at the end of workday. Remove and wash contaminated clothing before re-use.

9. Physical and Chemical Properties

Appearance:	Colored	**Physical State:**	Paste
Odor:	Very Slight Ammonia	**Odor Threshold:**	Not Established
Density, g/cm3:	1.64 - 1.67	**pH:**	Between 7.0 and 12.0
Freeze Point, °C:	Not Established	**Viscosity (mPa.s):**	Not Established
Solubility in Water:	Not Established	**Partition Coeff., n-octanol/water:**	Not Established
Decomposition Temperature, °C:	Not Established	**Explosive Limits, %:**	N.I. - N.I.
Boiling Range, °C:	N.I. - N.I.	**Auto-Ignition Temperature, °C**	Not Established
Minimum Flash Point, °C:	93.3	**Vapor Pressure, mmHg:**	No Information
Evaporation Rate:	Slower Than n-Butyl Acetate	**Flash Method:**	Seta Closed Cup
Vapor Density:	Heavier Than Air		
Combustibility:	Does not support combustion		

(See "Other information" Section for abbreviation legend)
(If product is an aerosol, the flash point stated above is that of the propellant.)

10. Stability and Reactivity

STABILITY: Stable under recommended storage conditions.

CONDITIONS TO AVOID: Excessive heat and freezing.

INCOMPATIBILITY: Incompatible with strong bases and oxidizing agents.

HAZARDOUS DECOMPOSITION PRODUCTS: Normal decomposition products, i.e., COx, NOx.

11. Toxicological Information

EFFECT OF OVEREXPOSURE - INHALATION: Under normal use conditions, this product is not expected to cause adverse health effects. Inhalation of vapors in high concentration may cause mild irritation of respiratory system (nose, mouth, mucous membranes).

EFFECT OF OVEREXPOSURE - SKIN CONTACT: Under normal use conditions, this product is not expected to cause adverse

health effects. Prolonged or repeated contact with skin may cause mild irritation.

EFFECT OF OVEREXPOSURE - EYE CONTACT: Under normal use conditions, this product is not expected to cause adverse health effects. Direct eye contact may cause irritation.

EFFECT OF OVEREXPOSURE - INGESTION: Under normal use conditions, this product is not expected to cause adverse health effects. Single dose oral toxicity is very low. Amounts ingested incidental to industrial handling are not likely to cause injury; however, ingestion of large amounts may cause injury.

CARCINOGENICITY: No Information

PRIMARY ROUTE(S) OF ENTRY: Inhalation, Skin Contact

Acute Toxicity Values
The acute effects of this product have not been tested. Data on individual components are tabulated below

CAS-No.	Chemical Name	Oral LD50	Dermal LD50	Vapor LC50
1317-65-3	Limestone	6450 mg/kg Rat	>2000 mg/kg	>20 mg/L
64741-88-4	Petroleum distillates	>5000 mg/kg Rat	>2000 mg/kg Rabbit	2.18 mg/L Rat
120-55-8	Diethylene glycol dibenzoate	2830 mg/kg Rat	2000 mg/kg Rabbit	> 200 mg/L Rat
13463-67-7	Titanium dioxide	>10000 mg/kg Rat	>5000 mg/kg Rabbit	>20 mg/L
14808-60-7	Quartz	500 mg/kg Rat	>2000 mg/kg	>20 mg/L
1333-86-4	Carbon black	>8000 mg/kg Rat	>3000 mg/kg Rabbit	6.750 mg/m3 Rat

N.I. = No Information

12. Ecological Information

ECOLOGICAL INFORMATION: Ecological injuries are not known or expected under normal use.

13. Disposal Information

DISPOSAL INFORMATION: This product does not meet the definition of a hazardous waste according to U.S. EPA Hazardous Waste Management Regulation, 40 CFR Section 261. Dispose as hazardous waste according to all local, state, federal and provincial regulations. State and Local regulations/restrictions are complex and may differ from Federal regulations. Responsibility for proper waste disposal is with the owner of the waste.

14. Transport Information

SPECIAL TRANSPORT PRECAUTIONS: No Information

DOT UN/NA Number:	N.A.
DOT Proper Shipping Name:	Not Regulated.
DOT Technical Name:	N.A.
DOT Hazard Class:	N.A.
Hazard SubClass:	N.A.
Packing Group:	N.A.

15. Regulatory Information

U.S. Federal Regulations:

CERCLA - SARA Hazard Category

This product has been reviewed according to the EPA 'Hazard Categories' promulgated under Sections 311 and 312 of the Superfund Amendment and Reauthorization Act of 1986 (SARA Title III) and is considered, under applicable definitions, to meet the following categories:

Acute Health Hazard, Chronic Health Hazard

SARA SECTION 313:

This product contains the following substances subject to the reporting requirements of Section 313 of Title III of the Superfund Amendment and Reauthorization Act of 1986 and 40 CFR part 372:

No Sara 313 components exist in this product.

TOXIC SUBSTANCES CONTROL ACT:

All ingredients in this product are either on TSCA inventory list, or otherwise exempt.
This product contains the following chemical substances subject to the reporting requirements of TSCA 12(B) if exported from the United States:

No TSCA 12(b) components exist in this product.

CALIFORNIA PROPOSITION 65 CARCINOGENS

WARNING: This product contains chemicals known to the State of California to cause cancer.

CALIFORNIA PROPOSITION 65 REPRODUCTIVE TOXINS

This product does not contain any chemicals known to the State of California to cause birth defects or other reproductive harm.

International Regulations: As follows -

CANADIAN WHMIS:

This MSDS has been prepared in compliance with Controlled Product Regulations except for the use of the 16 headings.

WHMIS Class Consumer Commodity

16. Other Information

Revision Date: 6/19/2015 **Supersedes Date:** 3/27/2012

Reason for revision: HazCom2012/GHS Conversion

Datasheet produced by: Regulatory Department

HMIS Ratings:

Health:	1	**Flammability:**	1	**Reactivity:**	0	**Personal Protection:**	X

VOC Less Water Less Exempt Solvent, g/L 42.6

VOC Material, g/L: 31

VOC as Defined by California Consumer Product Regulation, Wt/Wt%: 0.8

Text for GHS Hazard Statements shown in Section 3 describing each ingredient:

H270	May cause or intensify fire; oxidiser.
H302	Harmful if swallowed.
H312	Harmful in contact with skin.
H331	Toxic if inhaled.

Icons for GHS Pictograms shown in Section 3 describing each ingredient:

GHS03

GHS06

GHS07

Legend: N.A. - Not Applicable, N.E. - Not Established, N.D. - Not Determined

DAP believes the data and statements contained herein are accurate as of the date hereof. They are offered in good faith as typical values and not as a product specification. NO WARRANTY OF MERCHANTABILITY, WARRANTY OF FITNESS FOR ANY PARTICULAR PURPOSE OR ANY OTHER WARRANTY, EXPRESS OR IMPLIED, IS MADE WITH REGARD TO THE INFORMATION HEREIN PROVIDED OR THE PRODUCT TO WHICH THE INFORMATION REFERS. Since thisdocument is intended only as a guide to the appropriate use and precautionary handling of the referenced product by a properly trained person, it is therefore the responsibility of the user to (i) review the recommendations with due consideration for the specific context of the intended use and (ii) determine if they are appropriate.

Technical Bulletin

2400 Boston Street, Suite 200, Baltimore, Maryland 21224
Phone: 410-675-2100 or 800-543-3840

Revised: 2/12/15

DAP® ALEX PLUS® Acrylic Latex Adhesive Caulk Plus Silicone

- **Waterproof Seal**
- **Paintable**
- **Cured Caulk is Mold & Mildew Resistant**
- **Excellent Flexibility**
- **Easy Water Clean-Up**
- **Indoor/Outdoor Use**
- **Exceeds ASTM C834**

Packaging:	10.1 fluid ounce (300 mL) cartridge, 11.2 fluid ounce (331 mL), 5.5 fluid ounce (162 mL) squeeze tube
Colors:	White
UPC Numbers:	70798 18101, 70798 18136, 70798 18155, 70798 18128, 70798 11440, 70798 18101

Company Identification:

Manufacturer:	DAP Inc., 2400 Boston St., Baltimore, Maryland 21224
Usage Information:	Call 1-888-DAP-TIPS or visit dap.com & click on "Ask the Expert"
Order Information:	800-327-3339
Fax Number:	410-534-2650

Product Description:

ALEX PLUS® Acrylic Latex Caulk Plus Silicone is a professional quality caulking product formulated to last. It is an all-purpose adhesive caulk ideal for a wide variety of applications for interior and exterior use. ALEX PLUS® contains silicone, which allows for excellent adhesion and flexibility to resist expansion and contraction without cracking. It provides a waterproof seal and prevents air and moisture from passing through cracks and joints thereby improving energy efficiency. Cured caulk is mildew resistant. ALEX PLUS® is paintable with latex and oil-based paints. It is easy to use, easy to tool, low in odor, cleans up easily with soap and water and has a low VOC content.

Suggested Uses:

Ideal for caulking and sealing:

- *Window & door frames*
- *Eaves*
- *Baseboards*
- *Pipes*
- *Molding*
- *Vents*
- *Siding and trim*
- *Corner Joints*
- *Ducts*

Adheres To:

- *Wood*
- *Brick*
- *Drywall*
- *Metal*
- *Painted Surfaces*
- *Glass*
- *Plaster*
- *Most common building materials*

Performance Characteristics:

- Exceeds ASTM C834.
- Contains silicone to improve adhesion and flexibility.
- Resists cracking and chalking.
- Tack-free in 30 minutes.

Surface Preparation & Application:

1. Surface must be clean, dry and free of all old caulk, dirt, dust, grease and debris.
2. Remove cap (from tube). Cut nozzle at 45º angle to desired bead size.
3. Load into caulking gun if using the 10.1 oz.cartridge.
4. Fill gap with caulk, pushing caulk ahead of nozzle.
5. For a neat finish, smooth the bead of caulk with a finishing tool.
6. Clean up excess caulk with a damp sponge before it skins over.
7. Allow caulk to dry at 30 minutes (longer in cool or humid conditions) before painting with latex or oil-based paints.
8. Reseal for storage and reuse.

For Best Results:

- Caulk in temperatures above 40ºF.
- Do not apply when rain or freezing temperatures are forecasted before full cure can occur. Cold weather and high humidity will slow down cure time.
- Do not use below waterline or for marine or automobile applications.
- Do not use for filling butt joints, surface defects or for tuck-pointing.
- Joint size should not exceed 1/2” wide x1/2” deep. If joint depth exceeds 1/2", use backer rod material.
- Store caulk away from extreme heat or cold.

Typical Physical & Chemical Characteristics:

Vehicle:	Siliconized Acrylic Polymer
Volatile:	Water
Solids:	83% by weight
Weight per Gallon:	14.0 lbs./gal.
Service Temperature:	-20ºF to 180ºF
Temperature Application Range:	40ºF to 100ºF
Freeze Thaw Stability:	Passes 5 Cycles @ 0ºC (1 cycle = 16 hrs. @ 0ºC, 8 hrs. @ 25º C)
Dynamic Joint Movement:	± 12%
Flash Point:	None
Consistency:	Smooth and creamy
Applications:	Interior/Exterior
Shelf Life:	1 Year
Coverage:	10.1 fl. oz.: 55 linear feet at a 3/16"diameter bead
	5.5 fl. oz.: 30 linear feet at 3/16” diameter bead
Odor:	Very mild
Tooling Time:	10 minutes
Tack Free Time:	30 minutes
SDS No:	10002

Clean Up:
Clean up excess uncured caulk with a damp sponge before it skins over. Wash hands with warm water and soap. Dried material must be cut or scraped away.

Safety:
See product label or Safety Data Sheet for safety information. You can request an SDS sheet by calling 888-DAP-TIPS or by visiting our website at www.dap.com.

Guarantee:
If product fails to perform when used as directed, within one year of date of purchase, return used container & sales receipt to DAP Products Inc., Technical Customer Service, 2400 Boston St., Ste. 200, Baltimore, MD 21224 for replacement product or sales price refund. DAP is not liable for incidental or consequential damages.

Safety Data Sheet

24 Hour Emergency Phone Numbers:

Medical/Poison Control:

In U.S.: Call 1-800-222-1222
Outside U.S.: Call your local poison control center

Transportation/National Response Center:

1-800-535-5053
1-352-323-3500

NOTE: The National ResponseCenter emergency numbers to be used only in the event of chemical emergencies involving a spill, leak, fire, exposure or accident involving chemicals.

IMPORTANT: Provide this information to employees, customers, and users of this product. Read this SDS before handling or disposing of this product. This product is covered by the OSHA Hazard Communication Standard and this document has been prepared in accordance with requirements of this standard. All abbreviated terms used in this MSDS are further described in Section 16.

1. Identification

This Material Safety Data Sheet is available in American Spanish upon request.
Los Datos de Serguridad del Producto pueden obtenerse en Espanol si lo riquiere.

Product Name:	!00% Silicone Window & Door Clear	**Revision Date:**	5/19/2015
Product UPC Number:	08641	**Supercedes Date:**	No Information
Product Use/Class:	Caulking Compound	**SDS No:**	00008687001
Manufacturer:	DAP Products Inc. 2400 Boston Street Suite 200 Baltimore, MD 21224-4723 888-327-8477 (non-emergency matters)		
Preparer:	Regulatory Department		

2. Hazards Identification

EMERGENCY OVERVIEW: Under normal use conditions, this product is not expected to cause adverse health effects. High concentration of vapors may cause irritation to eyes and respiratory system.

GHS Classification

Not a hazardous substance or mixture.

Symbol(s) of Product

Not a hazardous substance or mixture.

Signal Word

Not a hazardous substance or mixture.

3. Composition/Information on Ingredients

Chemical Name	CAS-No.	Wt. %	GHS Symbols	GHS Statements
Hydrotreated middle distillate	64742-46-7	10-25	GHS06	H331

Silica, amorphous	7631-86-9	2.5-10	GHS07	H332
Silanetriol, methyl-, triaceta	4253-34-3	2.5-10	GHS07	H302-312-315-319-332

The text for GHS Hazard Statements shown above (if any) is given in the "Other information" Section.

4. First-aid Measures

FIRST AID - INHALATION: Material is not likely to present an inhalation hazard at ambient conditions. If you experience difficulty in breathing, leave the area to obtain fresh air. If continued difficulty is experienced, get medical attention immediately.

FIRST AID - SKIN CONTACT: Wash skin with soap and water for 15 minutes. Get medical aid if symptoms persist.

FIRST AID - EYE CONTACT: In case of contact, immediately flush eyes with large quantities of water for at least 15 minutes until irritation subsides. Get medical attention immediately.

FIRST AID - INGESTION: If swallowed, DO NOT INDUCE VOMITING. Get medical attention immediately.

5. Fire-fighting Measures

UNUSUAL FIRE AND EXPLOSION HAZARDS: None known.

SPECIAL FIREFIGHTING PROCEDURES: Wear self-contained breathing apparatus pressure-demand (NIOSH approved or equivalent) and full protective gear. Use water spray to cool exposed surfaces.

EXTINGUISHING MEDIA: Carbon Dioxide, Dry Chemical, Foam, Water Fog

6. Accidental Release Measures

ENVIRONMENTAL MEASURES: No Information

STEPS TO BE TAKEN IF MATERIAL IS RELEASED OR SPILLED: Contain spilled material and remove with inert absorbent. Dispose of contaminated absorbent, container and unused contents in accordance with local, state and federal regulations. Scrape up dried material and place into containers. Use personal protective equipment as necessary. In case of spillage, absorb with inert material and dispose of in accordance with applicable regulations.

7. Handling and Storage

HANDLING: KEEP OUT OF REACH OF CHILDREN!DO NOT TAKE INTERNALLY. Avoid breathing vapor and contact with eyes, skin and clothing. Use only with adequate ventilation. Ensure fresh air entry during application and drying. Wash thoroughly after handling. Remove contact lenses before using. Do not handle contact lenses until all sealant has been cleaned from fingertips, nails and cuticles. Residual sealant may transfer to contact lenses and cause severe eye irritation.

STORAGE: Avoid excessive heat and freezing. Do not store at temperatures above 120 degrees F. Store away from caustics and oxidizers.

8. Exposure Controls/Personal Protection

Ingredients with Occupational Exposure Limits

Chemical Name	ACGIH TLV-TWA	ACGIH-TLV STEL	OSHA PEL-TWA	OSHA PEL-CEILING
Hydrotreated middle distillate	N.E.	N.E.	N.E.	N.E.
Silica, amorphous	N.E.	N.E.	N.E.	N.E.
Silanetriol, methyl-, triaceta	N.E.	N.E.	N.E.	N.E.

Further Advice: MEL = Maximum Exposure Limit OES = Occupational Exposure Standard SUP = Supplier's Recommendation Sk = Skin Sensitizer N.E. = Not Established

Personal Protection

RESPIRATORY PROTECTION: No personal respiratory protective equipment normally required.

SKIN PROTECTION: Wear nitrile or neoprene gloves.

EYE PROTECTION: Goggles or safety glasses with side shields.

OTHER PROTECTIVE EQUIPMENT: Not required under normal use.

HYGIENIC PRACTICES: Wash hands before breaks and at the end of workday. Remove and wash contaminated clothing before re-use.

9. Physical and Chemical Properties

Appearance:	Clear	**Physical State:**	No Information
Odor:	Acetic Acid	**Odor Threshold:**	Not Established
Density, g/cm3:	0.96 - 0.96	**pH:**	Not Established
Freeze Point, °C:	Not Established	**Viscosity (mPa.s):**	Not Established
Solubility in Water:	Not Established	**Partition Coeff., n-octanol/water:**	Not Established
Decomposition Temperature, °C:	Not Established	**Explosive Limits, %:**	N.I. - N.I.
Boiling Range, °C:	N.I. - N.I.	**Auto-Ignition Temperature, °C**	Not Established
Minimum Flash Point, °C:	93.3	**Vapor Pressure, mmHg:**	No Information
Evaporation Rate:	Slower Than n-Butyl Acetate	**Flash Method:**	Seta Closed Cup
Vapor Density:	Heavier Than Air		
Combustibility:	Does not Support Combustion		

(See "Other information" Section for abbreviation legend)
(If product is an aerosol, the flash point stated above is that of the propellant.)

10. Stability and Reactivity

STABILITY: Stable under recommended storage conditions.

CONDITIONS TO AVOID: Oxidizing agents. Excessive heat and freezing.

INCOMPATIBILITY: Incompatible with strong bases and oxidizing agents.

HAZARDOUS DECOMPOSITION PRODUCTS: Normal decomposition products, i.e., COx, NOx.

11. Toxicological Information

EFFECT OF OVEREXPOSURE - INHALATION: Under normal use conditions, this product is not expected to cause adverse health effects. During application and cure, this product releases methanol. During application and cure, this product releases acetic acid. Inhalation of vapors in high concentration may cause mild irritation of respiratory system (nose, mouth, mucous membranes).

EFFECT OF OVEREXPOSURE - SKIN CONTACT: Under normal use conditions, this product is not expected to cause adverse health effects. Prolonged or repeated contact with skin may cause mild irritation.

EFFECT OF OVEREXPOSURE - EYE CONTACT: Under normal use conditions, this product is not expected to cause adverse health effects. Direct eye contact may cause irritation.

EFFECT OF OVEREXPOSURE - INGESTION: Under normal use conditions, this product is not expected to cause adverse health

effects. Single dose oral toxicity is very low. Amounts ingested incidental to industrial handling are not likely to cause injury; however, ingestion of large amounts may cause injury. Ingestion may result in obstruction when material hardens.

CARCINOGENICITY: No Information

PRIMARY ROUTE(S) OF ENTRY: Eye Contact, Inhalation, Skin Contact

Acute Toxicity Values
The acute effects of this product have not been tested. Data on individual components are tabulated below

CAS-No.	Chemical Name	Oral LD50	Dermal LD50	Vapor LC50
64742-46-7	Hydrotreated middle distillate	7400 mg/kg Rat	>2000 mg/kg Rabbit	4.6 mg/L Rat
7631-86-9	Silica, amorphous	>3300 mg/kg Rat	>5000 mg/kg Rabbit	>20 mg/L
4253-34-3	Silanetriol, methyl-, triaceta	1602 mg/kg Rat	1060 mg/kg Rabbit	11.6 mg/L

N.I. = No Information

12. Ecological Information

ECOLOGICAL INFORMATION: Ecological injuries are not known or expected under normal use.

13. Disposal Information

DISPOSAL METHOD: This product does not meet the definition of a hazardous waste according to U.S. EPA Hazardous Waste Management Regulation, 40 CFR Section 261. Dispose as hazardous waste according to all local, state, federal and provincial regulations. State and Local regulations/restrictions are complex and may differ from Federal regulations. Responsibility for proper waste disposal is with the owner of the waste.

STEPS TO BE TAKEN IF MATERIAL IS RELEASED OR SPILLED: Contain spilled material and remove with inert absorbent. Dispose of contaminated absorbent, container and unused contents in accordance with local, state and federal regulations. Scrape up dried material and place into containers. Use personal protective equipment as necessary. In case of spillage, absorb with inert material and dispose of in accordance with applicable regulations.

14. Transport Information

SPECIAL TRANSPORT PRECAUTIONS: No Information

DOT Proper Shipping Name: Not Regulated
DOT Technical Name: N.A.
Hazard SubClass: N.A.
DOT Hazard Class: N.A.
DOT UN/NA Number: N.A.
Packing Group: N.A.

15. Regulatory Information

U.S. Federal Regulations:

CERCLA - SARA Hazard Category

This product has been reviewed according to the EPA 'Hazard Categories' promulgated under Sections 311 and 312 of the Superfund Amendment and Reauthorization Act of 1986 (SARA Title III) and is considered, under applicable definitions, to meet the following categories:

Acute Health Hazard, Chronic Health Hazard

SARA SECTION 313:

This product contains the following substances subject to the reporting requirements of Section 313 of Title III of the Superfund Amendment and Reauthorization Act of 1986 and 40 CFR part 372:

No Sara 313 components exist in this product.

TOXIC SUBSTANCES CONTROL ACT:

All ingredients in this product are either on TSCA inventory list, or otherwise exempt.
This product contains the following chemical substances subject to the reporting requirements of TSCA 12(B) if exported from the United States:

No TSCA12(b) components exist in this product in concentrations at or above their thresholds.

CALIFORNIA PROPOSITION 65 CARCINOGENS

This product does not contain any chemicals known to the State of California to cause cancer.

CALIFORNIA PROPOSITION 65 REPRODUCTIVE TOXINS

This product does not contain any chemicals known to the State of California to cause birth defects or other reproductive harm.

International Regulations: As follows -

CANADIAN WHMIS:

This MSDS has been prepared in compliance with Controlled Product Regulations except for the use of the 16 headings.

WHMIS Class Consumer Commodity

16. Other Information

Revision Date: 5/19/2015 **Supersedes Date:** No Information

Reason for revision: HazCom2012/GHS Conversion

Datasheet produced by: Regulatory Department

HMIS Ratings:

Health:	1	**Flammability:**	1	**Reactivity:**	0	**Personal Protection:**	X

VOC Less Water Less Exempt, g/L:28.9

VOC, Material, g/L:29

VOC as Defined by California Consumer Product Regulation, Wt/Wt%:3.0

Text for GHS Hazard Statements shown in Section 3 describing each ingredient:

H302	Harmful if swallowed.
H312	Harmful in contact with skin.
H315	Causes skin irritation.
H319	Causes serious eye irritation.
H331	Toxic if inhaled.
H332	Harmful if inhaled.

Icons for GHS Pictograms shown in Section 3 describing each ingredient:

GHS06

GHS07

Legend: N.A. - Not Applicable, N.E. - Not Established, N.D. - Not Determined

DAP believes the data and statements contained herein are accurate as of the date hereof. They are offered in good faith as typical values and not as a product specification. NO WARRANTY OF MERCHANTABILITY, WARRANTY OF FITNESS FOR ANY PARTICULAR PURPOSE OR ANY OTHER WARRANTY, EXPRESS OR IMPLIED, IS MADE WITH REGARD TO THE INFORMATION HEREIN PROVIDED OR THE PRODUCT TO WHICH THE INFORMATION REFERS. Since thisdocument is intended only as a guide to the appropriate use and precautionary handling of the referenced product by a properly trained person, it is therefore the responsibility of the user to (i) review the recommendations with due consideration for the specific context of the intended use and (ii) determine if they are appropriate.

Technical Bulletin

2400 Boston Street, Suite 200, Baltimore, Maryland 21224
Phone: 410-675-2100 or 800-543-3840

Revised: October 10, 2013

DAP® 100% Silicone Window, Door & Siding Sealant

- **100% silicone**
- **Indoor/ Outdoor**
- **Flexible**
- **Minimal shrinkage**

Packaging: 2.8 fluid ounce squeeze tube (83 mL), 10.1 fluid ounce cartridge (300 mL)
Colors: White, Clear, Almond, Black, Aluminum, Bronze
UPC Nos: 70798 00683, 00684, 08646, 08641, 05841, 08642, 08643, 08647, 08649, 73473, 73477, 73462, 73485, 73497

Company Identification:
Manufactured by/ for: DAP Products Inc., 2400 Boston Street, Baltimore, Maryland 21224
Usage Information: DAP HELPLINE: 888-DAP-TIPS, 9:00 am to 7:00 pm EST
Order Information: 800-327-3339
Also, visit the DAP website at **www.dap.com.**

Product Description:
DAP® 100% Silicone Window, Door & Siding Sealant is an all-purpose, one component, acetoxy cure sealant ideal for indoor/outdoor use. It provides a watertight, flexible seal that won't crack, crumble or shrink. Once cured, it is unaffected by temperature extremes (-40°F to 400°F). When tested in accordance with ASTM C719, meets C920 specification for Class 25, Uses G & A* -(*Use A does not include Clear)

Suggested Uses:
Ideal for caulking and sealing:
- Around windows and doors
- Siding and trim
- Gutters and vents
- Molding

Adheres to:
- Glass
- Ceramic
- Fiberglass
- Porcelain
- Non-oily woods
- Canvas
- Most metals *(see **For Best Results** section)*
- Most plastics and rubbers
- Painted surface

Surface Preparation & Application:
- Remove old caulk from surface. Prepare a clean, dry surface which is free of loose debris, dust, dirt, soap, oil or grease.
- When using 2.8 oz squeeze tube, remove cap and puncture inner seal with other side of cap. Screw on nozzle and cut at 45° angle to desired bead size.

- When using 10.1 oz cartridge, cut nozzle at 45° angle to desired bead size. Puncture inner foil seal. Load into caulking gun.
- Apply sealant to surface, pushing sealant ahead of nozzle.
- Smooth bead with finishing tool if necessary.
- Clean up excess uncured sealant from surface and tools with mineral spirits. Excess cured sealant must be cut or scraped away. Wash hands with soap and water.
- Allow 24 hours for sealant to cure. Sealant will not cure in totally confined spaces.
- When applying to hard rubber or plastic surfaces, lightly sand or roughen surface before application to maximize adhesion.
- When bonding two surfaces together, always clamp until cured, if possible.
- When using sealant to form weather-stripping or other formed rubber parts, place wax paper over sealant to prevent sticking to mating piece until it has cured.
- Reseal for reuse.

For Best Results:

- Application temperature is between -35°F and 140°F.
- Joint width should not exceed 1/2". If joint depth exceeds 1/2", use backer rod material.
- Not paintable. Paint surfaces before sealing.
- Not recommended for continuous underwater use, below grade use, use on wet surfaces, oily woods, stovepipes or chimneys. Not for fireplace applications, tuck pointing, butt joints, structural glazing or repairing surface defects.
- Not recommended for use on cementitious materials or surfaces that might bleed oils, plasticizers or solvents. Substrates made of methylmethacrylate, polycarbonate, polypropylene, polyethylene and polytetrafluoroethylene do not allow for best adhesion and compatibility with sealant. Try test area before using.
- Not recommended for use on brass, copper, magnesium, zinc, iron, galvanized metals or other surfaces prone to attack by weak acids.
- Do not use where abrasion and physical abuse are encountered.
- Store in temperatures below 90°F in a dry place.

Typical Physical & Chemical Characteristics:

Polymer:	Silicone Rubber
Tooling Time:	5-10 Minutes
Tack Free Time:	10-20 Minutes
Dynamic Joint Movement:	±25%
Paintable:	No
Odor:	Vinegar-like
Consistency:	Smooth, Gunnable Paste
Specific Gravity:	0.96 @ 25°C
Solids:	97.0% by weight
Density:	8.0 lbs./gallon
Temperature Service Range:	-40°F to 400°F (after full cure)
Temperature Application Range:	-35°F to 140°F
Freeze Thaw Stable:	Yes
Shelf Life:	18 months from manufactured date
Coverage:	10.1 fl. oz.: 55 linear ft. at a 3/16" bead size
	2.8 fl. oz.: 15 linear ft. at a 3/16" bead size

Clean Up:

Remove excess uncured sealant from surfaces and tools with mineral spirits. Do not use mineral spirit to clean skin. Wash hands with soap and water. Cured sealant must be cut or scraped away.

Safety:
See product label and Safety Data Sheet (SDS) for safety information. You can request an SDS by visiting our website at **www.dap.com** or by calling **888-DAP-TIPS.**

Satisfaction Guaranteed:
If not satisfied with product performance within one year of purchase, return used container and sales receipt to DAP Inc., Technical Customer Service, 2400 Boston Street, Suite 200, Baltimore, MD 21224 for product replacement or sales price refund. DAP will not be liable for incidental or consequential damages.

An RPM Company

SAFETY DATA SHEET
THE DOW CHEMICAL COMPANY

Product name: THERMAX™ 0.50 Inch Insulation Sheathing

Issue Date: 05/04/2015
Print Date: 06/19/2015

THE DOW CHEMICAL COMPANY encourages and expects you to read and understand the entire (M)SDS, as there is important information throughout the document. We expect you to follow the precautions identified in this document unless your use conditions would necessitate other appropriate methods or actions.

1. IDENTIFICATION

Product name: THERMAX™ 0.50 Inch Insulation Sheathing

Recommended use of the chemical and restrictions on use
Identified uses: Thermal insulation. For industrial use. We recommend that you use this product in a manner consistent with the listed use. If your intended use is not consistent with the stated use, please contact your sales or technical service representative.

COMPANY IDENTIFICATION
THE DOW CHEMICAL COMPANY
2030 WILLARD H DOW CENTER
MIDLAND MI 48674-0000
UNITED STATES

Customer Information Number: 800-258-2436
SDSQuestion@dow.com

EMERGENCY TELEPHONE NUMBER
24-Hour Emergency Contact: 800-424-9300
Local Emergency Contact: 800-424-9300

2. HAZARDS IDENTIFICATION

Hazard classification
This material is not hazardous under the criteria of the Federal OSHA Hazard Communication Standard 29CFR 1910.1200.

Other hazards
no data available

3. COMPOSITION/INFORMATION ON INGREDIENTS

This product is a mixture.

Component	CASRN	Concentration

Modified Polyisocyanurate Rigid Cellular Polymer	Not applicable	> 55.0 %
Aluminum	7429-90-5	> 25.0 - < 35.0 %
Tris(1-chloro-2-propyl) phosphate	13674-84-5	< 10.0 %
Cyclopentane (8CI, 9CI)	287-92-3	< 10.0 %
Isopentane	78-78-4	< 5.0 %
Continuous Filament Glass Fiber	Not applicable	< 5.0 %
1-Bromopropane	106-94-5	< 5.0 %
2,2-Dimethylbutane	75-83-2	< 5.0 %

4. FIRST AID MEASURES

Description of first aid measures
General advice: If potential for exposure exists refer to Section 8 for specific personal protective equipment.

Inhalation: Move person to fresh air; if effects occur, consult a physician.

Skin contact: Wash off with plenty of water.

Eye contact: Flush eyes thoroughly with water for several minutes. Remove contact lenses after the initial 1-2 minutes and continue flushing for several additional minutes. If effects occur, consult a physician, preferably an ophthalmologist.

Ingestion: If swallowed, seek medical attention. May cause gastrointestinal blockage. Do not give laxatives. Do not induce vomiting unless directed to do so by medical personnel.

Most important symptoms and effects, both acute and delayed: Aside from the information found under Description of first aid measures (above) and Indication of immediate medical attention and special treatment needed (below), any additional important symptoms and effects are described in Section 11: Toxicology Information.

Indication of any immediate medical attention and special treatment needed
Notes to physician: If lavage is performed, suggest endotracheal and/or esophageal control. Danger from lung aspiration must be weighed against toxicity when considering emptying the stomach. May cause asthma-like (reactive airways) symptoms. Bronchodilators, expectorants, antitussives and corticosteroids may be of help. No specific antidote. Treatment of exposure should be directed at the control of symptoms and the clinical condition of the patient.

5. FIREFIGHTING MEASURES

Suitable extinguishing media: Water. Dry chemical fire extinguishers. Carbon dioxide fire extinguishers.

Unsuitable extinguishing media: no data available

Special hazards arising from the substance or mixture
Hazardous combustion products: During a fire, smoke may contain the original material in addition to combustion products of varying composition which may be toxic and/or irritating. In smoldering or flaming conditions, carbon monoxide, carbon dioxide and carbon are generated. Combustion products may include and are not limited to: Nitrogen oxides. Combustion products may include trace amounts of: Hydrogen cyanide. Hydrogen halides.

Unusual Fire and Explosion Hazards: Container may vent and/or rupture due to fire. When product is stored in closed containers, a flammable atmosphere can develop. Mechanical cutting, grinding, crushing or sawingcan cause formation of dusts. To reduce the potential for dust explosion, do not permit dust to accumulate. This product contains a flame retardant to inhibit accidental ignition from small fire sources. This plastic foam product is combustible and should be protected from flames and other high heat sources. For more information, contact Dow. Dense smoke is emitted when burned without sufficient oxygen.

Advice for firefighters
Fire Fighting Procedures: Keep people away. Isolate fire and deny unnecessary entry. Soak thoroughly with water to cool and prevent re-ignition. Cool surroundings with water to localize fire zone.

Special protective equipment for firefighters: Wear positive-pressure self-contained breathing apparatus (SCBA) and protective fire fighting clothing (includes fire fighting helmet, coat, trousers, boots, and gloves). If protective equipment is not available or not used, fight fire from a protected location or safe distance.

6. ACCIDENTAL RELEASE MEASURES

Personal precautions, protective equipment and emergency procedures: There are no special required instructions. Isolate area. Keep upwind of spill. Ventilate area of leak or spill. Use appropriate safety equipment. For additional information, refer to Section 8, Exposure Controls and Personal Protection.

Environmental precautions: Prevent from entering into soil, ditches, sewers, waterways and/or groundwater. See Section 12, Ecological Information.

Methods and materials for containment and cleaning up: Contain spilled material if possible. Recover spilled material if possible. See Section 13, Disposal Considerations, for additional information.

7. HANDLING AND STORAGE

Precautions for safe handling: This material is combustible and should not be exposed to flame or other ignition sources. No smoking, open flames or sources of ignition in handling and storage area. Fabrication methods which involve cutting into this product may release the blowing agent(s) remaining in the cells. Provide adequate ventilation to assure localized concentrations in release areas are maintained below the lower flammable limit. Refer to Exposure Controls and Personal Protection, Section 8 of the MSDS. Avoid breathing vapor. Use with adequate ventilation. Keep container closed. See Section 8, EXPOSURE CONTROLS AND PERSONAL PROTECTION.

Good housekeeping and controlling of dusts are necessary for safe handling of product.

Conditions for safe storage: Minimize sources of ignition, such as static build-up, heat, spark or flame. Flammable vapors may accumulate in some storage situations. During shipment, storage, installation and use, this material should not be exposed to flame or other ignition sources.

8. EXPOSURE CONTROLS/PERSONAL PROTECTION

Control parameters
Exposure limits are listed below, if they exist.

Component	Regulation	Type of listing	Value/Notation
Aluminum	OSHA Z-1	TWA total dust	15 mg/m3 , Aluminium
	OSHA Z-1	TWA respirable fraction	5 mg/m3 , Aluminium
	ACGIH	TWA Respirable fraction	1 mg/m3 , Aluminium
Cyclopentane (8CI, 9CI)	ACGIH	TWA	600 ppm
Isopentane	ACGIH	TWA	1,000 ppm
1-Bromopropane	Dow IHG	TWA	5 ppm
	ACGIH	TWA	0.1 ppm
2,2-Dimethylbutane	ACGIH	TWA	500 ppm
	ACGIH	STEL	1,000 ppm

Concentrations of the blowing agents anticipated incidental to proper handling are expected to be well below those which cause acute inhalation effects and below exposure guidelines.

Exposure controls
Engineering controls: Use engineering controls to maintain airborne level below exposure limit requirements or guidelines. If there are no applicable exposure limit requirements or guidelines, use only with adequate ventilation. Local exhaust ventilation may be necessary for some operations.

Individual protection measures

Eye/face protection: Eye protection should not be necessary. For fabrication operations safety glasses (with side shields) are recommended. If there is a potential for exposure to particles which could cause eye discomfort, wear chemical goggles.

Skin protection

Hand protection: Use gloves to protect from mechanical injury. Selection of gloves will depend on the task.

Other protection: Use protective clothing chemically resistant to this material. Selection of specific items such as face shield, boots, apron, or full body suit will depend on the task.

Respiratory protection: Respiratory protection should be worn when there is a potential to exceed the exposure limit requirements or guidelines. If there are no applicable exposure limit requirements or guidelines, wear respiratory protection when adverse effects, such as respiratory irritation or discomfort have been experienced, or where indicated by your risk assessment process. If respiratory irritation is experienced, use an approved air-purifying respirator.
The following should be effective types of air-purifying respirators: Particulate filter.

9. PHYSICAL AND CHEMICAL PROPERTIES

Appearance	
Physical state	Board
Color	Tan
Odor	Mild
Odor Threshold	No test data available
pH	Not applicable
Melting point/range	Not applicable
Freezing point	Not applicable
Boiling point (760 mmHg)	Not applicable
Flash point	**closed cup** Not applicable
Evaporation Rate (Butyl Acetate = 1)	No test data available
Flammability (solid, gas)	no data available
Lower explosion limit	Not applicable
Upper explosion limit	Not applicable
Vapor Pressure	Not applicable
Relative Vapor Density (air = 1)	Not applicable
Relative Density (water = 1)	0.02 - 0.05 *Literature*
Water solubility	*Literature* Insoluble in water
Partition coefficient: n-octanol/water	no data available
Auto-ignition temperature	490 °C (914 °F) *ASTM D1929*
Decomposition temperature	No test data available
Kinematic Viscosity	Not applicable
Explosive properties	no data available
Oxidizing properties	no data available
Molecular weight	No test data available

NOTE: The physical data presented above are typical values and should not be construed as a specification.

10. STABILITY AND REACTIVITY

Reactivity: No dangerous reaction known under conditions of normal use.

Chemical stability: Thermally stable at typical use temperatures.

Possibility of hazardous reactions: Polymerization will not occur.

Conditions to avoid: Avoid temperatures above 150°C (302°F) Exposure to elevated temperatures can cause product to decompose. Avoid direct sunlight.

Incompatible materials: Avoid contact with: Strong oxidizers.

Hazardous decomposition products: Decomposition products depend upon temperature, air supply and the presence of other materials. Toxic gases are released during decomposition.

11. TOXICOLOGICAL INFORMATION

Toxicological information on this product or its components appear in this section when such data is available.

Acute toxicity

Acute oral toxicity
Swallowing is unlikely because of the physical state. Very low toxicity if swallowed. Harmful effects not anticipated from swallowing small amounts. May cause choking if swallowed.

As product: Single dose oral LD50 has not been determined.

Based on information for component(s):
LD50, Rat, > 5,000 mg/kg

Acute dermal toxicity
Skin absorption is unlikely due to physical properties.

As product: The dermal LD50 has not been determined.

For the minor component(s):
LD50, Rabbit, > 5,000 mg/kg

Acute inhalation toxicity
Dusts or fibers generated in processing may cause irritation of the upper respiratory tract (nose and throat). Fumes or dusts generated from cutting or grinding operations may cause irritation of the upper respiratory tract and lungs. Concentrations of the blowing agents anticipated incidental to proper handling are expected to be well below those which cause acute inhalation effects and below exposure guidelines.

As product: The LC50 has not been determined.

For the minor component(s):
LC50, Rat, 4 Hour, Aerosol, > 4.6 mg/l

Skin corrosion/irritation
May cause itching.
May cause skin irritation due to mechanical abrasion.

Serious eye damage/eye irritation
Solid or dust may cause irritation or corneal injury due to mechanical action.
Fumes or dust generated from cutting or grinding operations may cause eye irritation.

Sensitization
For skin sensitization:
Relevant data not available.

For respiratory sensitization:
Relevant data not available.

Specific Target Organ Systemic Toxicity (Single Exposure)
Product test data not available.

Specific Target Organ Systemic Toxicity (Repeated Exposure)
Repeated exposures to dusts of this material are not anticipated to result in systemic toxicity or permanent lung injury; however, excessive exposures may cause less severe respiratory effects.
The data presented are for the following material:
The fiberglass in this product is continuous filament fiberglass.
Repeated exposure to particles generated by grinding may result in implantation of particles in the skin.
Contains a component(s) that is/are encapsulated in the product and are not expected to be released under normal processing conditions or foreseeable emergency

Carcinogenicity
The fiberglass in this product is continuous filament fiberglass. IARC's evaluation of data on continuous filament fiberglass is that there is inadequate evidence of carcinogenicity in animals and in humans. IARC's classification was based primarily on animal studies involving routes of administration (intratracheal, intrapleural, and intraperitoneal) which have limited relevance to typical exposures anticipated in industrial settings. Contains a component(s) that is/are encapsulated in the product and are not expected to be released under normal processing conditions or foreseeable emergency

Teratogenicity
Contains a component(s) that is/are encapsulated in the product and are not expected to be released under normal processing conditions or foreseeable emergency

Reproductive toxicity
Contains a component(s) that is/are encapsulated in the product and are not expected to be released under normal processing conditions or foreseeable emergency

Mutagenicity
The data presented are for the following material: The fiberglass in this product is continuous filament fiberglass. In vitro genetic toxicity studies were inconclusive. Contains a component(s) that is/are encapsulated in the product and are not expected to be released under normal processing conditions or foreseeable emergency

Aspiration Hazard
Based on physical properties, not likely to be an aspiration hazard.

COMPONENTS INFLUENCING TOXICOLOGY:

Aluminum

Specific Target Organ Systemic Toxicity (Single Exposure)

Available data are inadequate to determine single exposure specific target organ toxicity.

Tris(1-chloro-2-propyl) phosphate

Specific Target Organ Systemic Toxicity (Single Exposure)
Evaluation of available data suggests that this material is not an STOT-SE toxicant.

Cyclopentane (8Cl, 9Cl)

Specific Target Organ Systemic Toxicity (Single Exposure)
May cause drowsiness or dizziness.
Route of Exposure: Inhalation
Target Organs: Central nervous system

Isopentane

Specific Target Organ Systemic Toxicity (Single Exposure)
May cause drowsiness or dizziness.
Route of Exposure: Inhalation
Target Organs: Central nervous system

Continuous Filament Glass Fiber

Specific Target Organ Systemic Toxicity (Single Exposure)
Available data are inadequate to determine single exposure specific target organ toxicity.

1-Bromopropane

Specific Target Organ Systemic Toxicity (Single Exposure)
May cause respiratory irritation.
Route of Exposure: Inhalation
Target Organs: Lungs

May cause drowsiness or dizziness.
Route of Exposure: Inhalation
Target Organs: Central nervous system

2,2-Dimethylbutane

Specific Target Organ Systemic Toxicity (Single Exposure)
May cause drowsiness or dizziness.
Target Organs: Central nervous system

Carcinogenicity

Component	List	Classification
1-Bromopropane	ACGIH	A3: Confirmed animal carcinogen with unknown relevance to humans.

12. ECOLOGICAL INFORMATION

Ecotoxicological information on this product or its components appear in this section when such data is available.

Toxicity

Acute toxicity to fish
Not expected to be acutely toxic to aquatic organisms.

Persistence and degradability

Biodegradability: Surface photodegradation is expected with exposure to sunlight. No appreciable biodegradation is expected.

Bioaccumulative potential

Bioaccumulation: No bioconcentration is expected because of the relatively high molecular weight (MW greater than 1000).

Mobility in soil

In the terrestrial environment, material is expected to remain in the soil.
In the aquatic environment, material is expected to float.

13. DISPOSAL CONSIDERATIONS

Disposal methods: DO NOT DUMP INTO ANY SEWERS, ON THE GROUND, OR INTO ANY BODY OF WATER. All disposal practices must be in compliance with all Federal, State/Provincial and local laws and regulations. Regulations may vary in different locations. Waste characterizations and compliance with applicable laws are the responsibility solely of the waste generator. AS YOUR SUPPLIER, WE HAVE NO CONTROL OVER THE MANAGEMENT PRACTICES OR MANUFACTURING PROCESSES OF PARTIES HANDLING OR USING THIS MATERIAL. THE INFORMATION PRESENTED HERE PERTAINS ONLY TO THE PRODUCT AS SHIPPED IN ITS INTENDED CONDITION AS DESCRIBED IN MSDS SECTION: Composition Information. FOR UNUSED & UNCONTAMINATED PRODUCT, the preferred options include sending to a licensed, permitted: Landfill. Incinerator or other thermal destruction device.

14. TRANSPORT INFORMATION

DOT

Not regulated for transport

Classification for SEA transport (IMO-IMDG):

Not regulated for transport

Transport in bulk according to Annex I or II of MARPOL 73/78 and the IBC or IGC Code Consult IMO regulations before transporting ocean bulk

Classification for AIR transport (IATA/ICAO):

Not regulated for transport

This information is not intended to convey all specific regulatory or operational requirements/information relating to this product. Transportation classifications may vary by container volume and may be influenced by regional or country variations in regulations. Additional transportation system information can be obtained through an authorized sales or customer service representative. It is the responsibility of the transporting organization to follow all applicable laws, regulations and rules relating to the transportation of the material.

15. REGULATORY INFORMATION

OSHA Hazard Communication Standard
This product is not a "Hazardous Chemical" as defined by the OSHA Hazard Communication Standard, 29 CFR 1910.1200.

Superfund Amendments and Reauthorization Act of 1986 Title III (Emergency Planning and Community Right-to-Know Act of 1986) Sections 311 and 312
This product is not a hazardous chemical under 29CFR 1910.1200, and therefore is not covered by Title III of SARA.

Superfund Amendments and Reauthorization Act of 1986 Title III (Emergency Planning and Community Right-to-Know Act of 1986) Section 313
This product contains the following substances which are subject to the reporting requirements of Section 313 of Title III of the Superfund Amendments and Reauthorization Act of 1986 and which are listed in 40 CFR 372.

Components	CASRN
Aluminum	7429-90-5

Pennsylvania Worker and Community Right-To-Know Act:
The following chemicals are listed because of the additional requirements of Pennsylvania law:

Components	CASRN
Aluminum	7429-90-5
1-Bromopropane	106-94-5
Cyclopentane (8CI, 9CI)	287-92-3
Isopentane	78-78-4
2,2-Dimethylbutane	75-83-2

California Proposition 65 (Safe Drinking Water and Toxic Enforcement Act of 1986)
WARNING: This product contains a chemical(s) known to the State of California to cause birth defects or other reproductive harm.

Components	CASRN
1-Bromopropane	106-94-5

United States TSCA Inventory (TSCA)
The product meets the definition of an article and is exempt from inventory requirements.

16. OTHER INFORMATION

Product Literature
Additional information on this product may be obtained by calling your sales or customer service contact. Ask for a product handling guide.

Revision
Identification Number: 101195906 / A001 / Issue Date: 05/04/2015 / Version: 15.0

Most recent revision(s) are noted by the bold, double bars in left-hand margin throughout this document.

Legend

ACGIH	USA. ACGIH Threshold Limit Values (TLV)
Dow IHG	Dow Industrial Hygiene Guideline
OSHA Z-1	USA. Occupational Exposure Limits (OSHA) - Table Z-1 Limits for Air Contaminants
STEL	Short-term exposure limit
TWA	8-hour, time-weighted average

Information Source and References
This SDS is prepared by Product Regulatory Services and Hazard Communications Groups from information supplied by internal references within our company.

THE DOW CHEMICAL COMPANY urges each customer or recipient of this (M)SDS to study it carefully and consult appropriate expertise, as necessary or appropriate, to become aware of and understand the data contained in this (M)SDS and any hazards associated with the product. The information herein is provided in good faith and believed to be accurate as of the effective date shown above. However, no warranty, express or implied, is given. Regulatory requirements are subject to change and may differ between various locations. It is the buyer's/user's responsibility to ensure that his activities comply with all federal, state, provincial or local laws. The information presented here pertains only to the product as shipped. Since conditions for use of the product are not under the control of the manufacturer, it is the buyer's/user's duty to determine the conditions necessary for the safe use of this product. Due to the proliferation of sources for information such as manufacturer-specific (M)SDSs, we are not and cannot be responsible for (M)SDSs obtained from any source other than ourselves. If you have obtained an (M)SDS from another source or if you are not sure that the (M)SDS you have is current, please contact us for the most current version.

THERMAX™ Sheathing

1. PRODUCT NAME

THERMAX™ Sheathing

2. MANUFACTURER

The Dow Chemical Company
Dow Building Solutions
200 Larkin
Midland, MI 48674
1-866-583-BLUE (2583)
Fax 1-989-832-1465
www.dowbuildingsolutions.com

3. PRODUCT DESCRIPTION

THERMAX™ Sheathing is a non-structural, rigid board insulation consisting of a glass-fiber-infused polyisocyanurate foam core laminated between 1.0 mil smooth, reflective aluminum facers on both sides. The glass-fiber reinforcement contributes to improved fire performance and dimensional stability. THERMAX™ Sheathing can be installed exposed to the interior without a thermal barrier.

THERMAX™ Sheathing offers high, long-term R-value. Used in conjunction with the appropriate joint closure system for the application, THERMAX™ Sheathing with its low perm rating helps to reduce moisture condensation within and behind the insulation.

BASIC USE

THERMAX™ Sheathing is specially designed to have a Class A fire rating and can be used in a range of concealed and exposed applications, above and below grade, and can be used in exterior walls. Because of its improved fire performance, THERMAX™ Sheathing is especially appropriate for hourly rated assemblies. THERMAX™ Sheathing is approved for use, per Section 2603.5 of the International Building Code, in Exterior Walls of Types I,II,III and IV construction. THERMAX™ Sheathing is designed for use as continuous insulation in both interior and exterior applications to assist in meeting and exceeding both the most current IECC and the ASHRAE 90.1 energy standards. Maximum length is 30 ft. (9.1 m) and maximum thickness is 4.25" (108 mm).

4. TECHNICAL DATA

APPLICABLE STANDARDS

THERMAX™ Sheathing meets ASTM C1289 – Standard Specification for Faced Rigid Cellular Polyisocyanurate Thermal Insulation Board, Type I, Class 2. Applicable standards include:

- C203 – Standard Test Methods for Breaking Load and Flexural Properties of Block-Type Thermal Insulation
- C209 – Standard Test Methods for Cellulosic Fiber Insulating Board
- C518 – Standard Test Method for Steady-State Thermal Transmission Properties by Means of the Heat Flow Meter Apparatus
- D1621 – Standard Test Method for Compressive Properties of Rigid Cellular Plastics
- D2126 – Standard Test Method for Response of Rigid Cellular Plastics to Thermal and Humid Aging
- E96 – Standard Test Method for Water Vapor Transmission of Materials
- D1623 – Standard Test Method for Tensile and Tensile Adhesion Properties of Rigid Cellular Plastics

TYPICAL PHYSICAL PROPERTIES

THERMAX™ Sheathing exhibits the typical physical properties and characteristics indicated in Table 2 when tested as represented.

ENVIRONMENTAL DATA

THERMAX™ Sheathing is manufactured with a zero ozone depleting potential. The use of THERMAX™ Sheathing helps reduce the carbon footprint of commercial buildings.

FIRE INFORMATION

THERMAX™ Sheathing products should be used only in strict accordance with product application instructions. THERMAX™ products are combustible and when used in a building containing combustible materials, may contribute to the spread of fire. For more information, consult MSDS and/or call Dow at 1-866-583-BLUE (2583). In an emergency, call 1-989-636-4400.

CODE COMPLIANCES

THERMAX™ Sheathing complies with the following codes:

- ASTM E2178 Standard Test Method for Air Permeance of Building Materials - leakage rates less than 0.001 L/s/m^2 at a test pressure of 75 Pa.
- ASTM E283 Standard Test Method for Determining Rate of Air Leakage through Exterior Windows, Curtain Walls, and Doors under specified Pressure differences across the specimen. Results were <0.02 L/s/m^2
- ASTM E2357 Standard Test Method for Determining Air Leakage of Air Barrier Assemblies - no leakage
- ASTM E331 Standard Test Method for Water Penetration of Exterior Windows, Skylights, Doors, and Curtain Walls by Uniform Static Air Pressure Difference - no leakage
- 2009 International Residential Code (IRC) Section 316
- 2009 International Building Code (IBC) Section 2603
- ICC-ES ESR-1659
- FM 4880 – Wall-Ceiling Construction Metal-Faced – Class 1 Fire Rated to Max. 30' Exposure High, 4.25" Thick, 4' Wide, When Installed as Described in the Current Edition of FMRC Approval Guide
- FM 4450 Approval Standard for Class 1 Insulated - Steel Deck Roofs
- THERMAX™ products are covered under Underwriters Laboratories Inc. (UL) File R5622

- UL 1256 – Fire Test of Roof Deck Constructions, Roof Deck Construction No. 120 and No. 123
- UL 723 (ASTM E84) Surface Burning Characteristics of Building Materials
- The following designs are 1, 2, 3 or 4 hour wall rated assemblies as listed in the UL Fire Resistance Directory: U026, U326, U330, U354, U355, U424, U425, U460, U902, U904, U905, U906, U907, V454, V482, V499
- Fire Performance Evaluation of an Exterior Masonry Wall System Incorporating THERMAX™ Insulation Tested in Accordance With NFPA 285, 2006 Edition (UBC 26.9, intermediate scale – multistory testing)
- FMVSS No. 302 – Flammability of Interior Materials – Passenger Cars, Multipurpose Passenger Vehicles, Trucks and Buses (Docket No. 3-3; Notice 4)
- Miami-Dade NOA 08-0320.01 Interior Insulation on CMU Block

Contact your Dow sales representative or local authorities for state and local building code requirements and related acceptances.

5. INSTALLATION

Boards of THERMAX™ Sheathing are lightweight and can be sawed or cut with a knife. They install quickly to walls (girts, steel stud, tilt-up, block, wood) and ceilings – inside and outside of purlins, trusses or bar joints. Butt joints must be installed over structural members. "Best practice" recommendations for high-humidity environments include continuously sealing the surface of the insulation at all joints with a Dow joint closure system.

Contact a local Dow representative or access the literature library at www.dowbuildingsolutions.com for more specific instructions.

6. AVAILABILITY

THERMAX™ Sheathing is manufactured in several locations and is distributed through an extensive network. For more information, call 1-800-232-2436.

7. WARRANTY

Fifteen-year limited warranty is available. Contact your Dow representative for details.

8. MAINTENANCE

Not applicable.

9. TECHNICAL SERVICES

Dow can provide technical information to help address questions when using THERMAX™ Sheathing. Technical personnel are available to assist with any insulation project. For technical assistance, call 1-866-586-BLUE (2583).

10. FILING SYSTEMS

- www.dowbuildingsolutions.com
- www.DowMetalBuilding.com

TABLE 1: SIZES, R-VALUES AND EDGE TREATMENTS FOR THERMAX™ SHEATHING

Nominal Board Thickness(1), in.	R-value (2)(3)	Board Size, ft	Edge Treatment
0.5	3.3	4 × 8, 4 × 9, 4 × 10	Square Edge
0.75	5	4 × 8, 4 × 9, 4 × 10	Square Edge
1	6.5	4 × 8, 4 × 9, 4 × 10	Square Edge
1.5	9.8	4 × 8, 4 × 9, 4 × 10	Square Edge, Shiplap
2	13	4 × 8, 4 × 9, 4 × 10	Square Edge, Shiplap

(1) Contact your Dow seller for information at different R-values and other sizes and lead time requirements. Not all product sizes are available in all regions.
(2) R means resistance to heat flow. The higher the R-value, the greater the insulating power. Stabilized R-values @ 75°F mean temperature determined in accordance with ASTM C518. R-values expressed in ft^2•h•°F/Btu.
(3) An additional 2.77 R-value may be added to the system R-value, when a minimum 3/4" ideal air space and horizontal heat flow are present in accordance with the ASHRAE Fundamentals Handbook on FTC, 16 CFR Part 460.

TABLE 2: TYPICAL PHYSICAL PROPERTIES OF THERMAX™ SHEATHING

Property and Test Method	Value
Compressive Strength (1), ASTM D1621, psi, min.	25
Flexural Strength, ASTM C203, psi, min.	40
Water Absorption, ASTM C209, % by volume, max.	0.1
Water Vapor Permeance, ASTM E96, perm, max.	≤0.04
Maximum Use Temperature, °F	250

(1) Vertical compressive strength is measured at 10 percent deformation or at yield, whichever occurs first.

In the U.S.
The Dow Chemical Company
Dow Building Solutions
200 Larkin Center,
Midland, MI 48674

Technical Information
1-866-583-BLUE (2583)
Sales Information
1-800-232-2436

dowbuildingsolutions.com

Form No. 179-04015 -0715 CDP

Aluminum Carrier

for use with QDS 650

ECP Building Envelope Specialists, Inc.

Product Application:
Compression Seal Carrier/Swing Door

Material:
6063-T5 Anodized Aluminum

Width:
.875 ± .010

Height:
.450 ± .007

Length:
84 inches

Color:
Mill Finish Aluminum,Bronze Anodized, Black Anodized

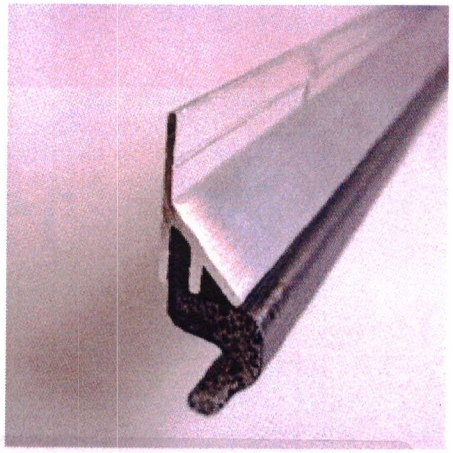

Carrier shown with QDS 650
Clear Mill Finish

Installation:
Mechanically fastened to strike side, hinge side and header.

Specifications:
T5 temper 6063 has an ultimate tensile strength of at least 22,000 psi (152 MPa) in thicknesses up to 0.5-inch (13 mm), and 21,000 psi (145 MPa) from 0.5 to 1.0-inch (25 mm) thick, and yield strength of at least 16,000 psi (110 MPa) up to 0.5-inch (13 mm) and 15,000 psi (103 MPa) (from 0.5 to 1.0-inch (25 mm). It has elongation of 8%.

Note:
All carrier is cut to meet specific length requirements for each door weather-stripping installation.

ECP Building Envelope Specialists, Inc.

88 Connecticut Rd
Plattsburgh, NY 12903

Phone: 518-563-0579
Fax: 518-563-2659
E-mail: rwhisher@ecp1.com

ECP
BUILDING ENVELOPE SPECIALISTS, INC.

Q-LON® QDS 650 DOOR SEAL

Schlegel®

SUPERIOR WEATHER PROTECTION BACKED BY THE SCHLEGEL STORM SHIELD GUARANTEE

QDS 650

PRODUCT APPLICATIONS
Compression Seal/Swing Door

MATERIAL
Polyethylene Clad Urethane Foam

KERF WIDTH
.125" (3.2mm)

KERF DEPTH
.438" (11.1mm)

COMPRESSION
Recommended 50%
Minimum 10%
Maximum 60%

RABBET DEPTH
2-1/8" (54mm)

COMPRESSION SET
Less than 5% when compressed to 50% of its original reach for 22 hrs. at 158° F (70° C).

INSTALLATION
One profile seals the strike side, hinge side and header.

FIRE RATING
Category H Edge Sealing System and Category J Gasketing for use with Category B wood doors rated 20 minutes fire tested without hose stream and Category B wood and plastic-covered composite doors rated up to 90 minutes.

STANDARD PACK
37" (.94m) 250 pcs./carton
82" (2.08m) 125 pcs./carton
86" (2.18m) 100 pcs./carton
97" (2.46m) 125 pcs./carton
120" (3.05m) 125 pcs./carton
144" (3.66m) 125 pcs./carton

COLORS
Grey, black, white, bronze, beige

COLOR/LENGTH	PART NO.	COLOR/LENGTH	PART NO.
Grey 37" (.94m)	U8331-03700	White 97" (2.46m)	U8333-09700
Grey 82" (2.08m)	U8331-08200	White 120" (3.05m)	U8333-12000
Grey 86" (2.18m)	U8331-08600	White 144" (3.66m)	U8333-14400
Grey 97" (2.46m)	U8331-09700	Bronze 37" (.94m)	U8334-03700
Grey 120" (3.05m)	U8331-12000	Bronze 82" (2.08m)	U8334-08200
Grey 144" (3.66m)	U8331-14400	Bronze 86" (2.18m)	U8334-08600
Black 37" (.94m)	U8332-03700	Bronze 97" (2.46m)	U8334-09700
Black 82" (2.08m)	U8332-08200	Bronze 120" (3.05m)	U8334-12000
Black 86" (2.18m)	U8332-08600	Bronze 144" (3.66m)	U8334-14400
Black 97" (2.46m)	U8332-09700	Beige 37" (.94m)	U8336-03700
Black 120" (3.05m)	U8332-12000	Beige 82" (2.08m)	U8336-08200
Black 144" (3.66m)	U8332-14400	Beige 86" (2.18m)	U8336-08600
White 37" (.94m)	U8333-03700	Beige 97" (2.46m)	U8336-09700
White 82" (2.08m)	U8333-08200	Beige 120" (3.05m)	U8336-12000
White 86" (2.18m)	U8333-08600	Beige 144" (3.66m)	U8336-14400

NOTE: Other lengths available upon request.
Tolerance +/- 1" (25.4mm)

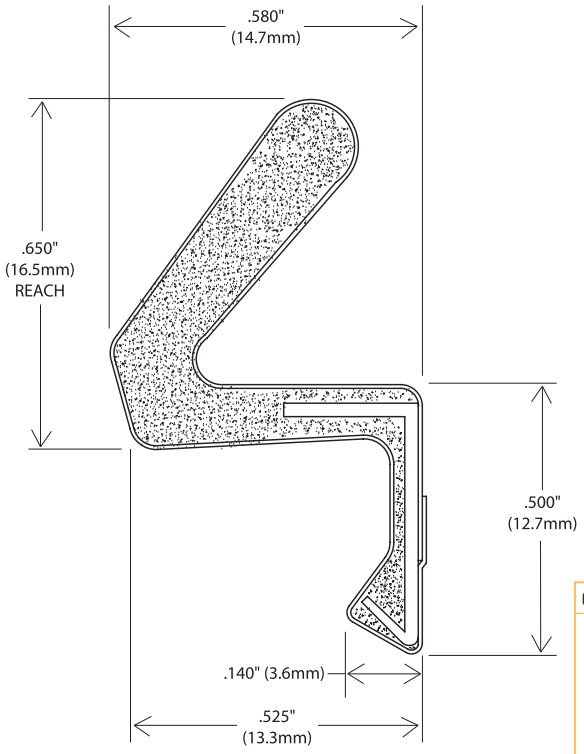

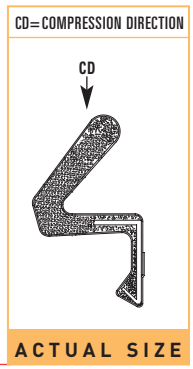

CLASSIFIED UL
UP TO 90 MINUTES

Covered under Storm Shield Guarantee program. Guaranteed for the life of your door.

Q-LON® QDS 650 DOOR SEAL

Q-LON Door Seal is made of an open-cell urethane foam core and clad in an embossed polyethylene, U.V. stablized, paint-resistant liner for kerf applications.

Schlegel®

QDS 650

	LINEAL SHRINKAGE	
	%	Q-LON PERFORMANCE
Q-LON door seals	0.10	—
Knock-off door seals	1.10	11.0 times better
TPE magnetic seals	0.40	4.0 times better

	COMPRESSION SET	
	%	Q-LON PERFORMANCE
Q-LON door seals	5	—
Knock-off door seals	17	3.4 times better
Closed-cell foam seals	13	2.6 times better
TPE compression seals	25	5.0 times better
TPE magnetic seals	50	10.0 times better

PRODUCT HIGHLIGHTS

FEATURE	BENEFIT
Highly engineered embossed polyethylene liner	Resists paints and varnishes. Long lasting. Maintains an attractive appearance.
UV stabilized	Stable in sunlight (UV stable). Tested up to 5,000 Kj/m^2 with no visible degradation.
Resilient urethane open-celled foam	Shape and resiliency are retained over time. Offers excellent all-temperature sealing performance. No corner leaks. Seal conforms to uneven surfaces.
Fully wrapped insert	Offers maximum protection against wood preservatives.

Q-LON DOOR SEAL TEST DATA

WATER INFILTRATION Passed water penetration tests at 25 mph (40km/h) and 34 mph (55km/h) ASTM E-331 standard test method.

WATER ABSORPTION No visible effects in degradation; water absorption negligible after being submerged in water for 24 hours and then exposed to -30° F (-34° C) for one week. Compressed 50% upon removal from the freezer. (Tested at Schlegel Testing Laboratories.)

Schlegel®

Schlegel Systems, Inc.
1555 Jefferson Road
Rochester, New York
14692-3197

800.586.0354 Toll free
585.427.9993 Fax

www.schlegel.com
e-mail: bpdproducts@schlegel.com

DOOR SEAL | SURFACE

Q-LON® QFS 375 DOOR SEAL (ADHESIVE BACKED)

Schlegel®

SUPERIOR WEATHER PROTECTION BACKED BY THE SCHLEGEL STORM SHIELD GUARANTEE

QFS 375

PRODUCT APPLICATIONS
Compression Seal/Fire-Rated Door

MATERIAL
Polyethylene Clad Urethane Foam

STOP WIDTH
.500" (12.7mm)

COMPRESSION
Recommended 50%
Minimum 20%
Maximum 60%

COMPRESSION SET
Less than 5% when compressed to 50% of its original reach for 22 hrs. at 158° F (70° C).

INSTALLATION
Profile seals the strike side, hinge side and header.

FIRE RATING
Category H Edge Sealing System and Category J Gasketing for use with Category B wood doors rated 20 minutes fire tested without hose stream and Category B wood and plastic-covered composite doors rated up to 90 minutes. Also for use with Listed steel frames and/or Classified steel covered composite, hollow metal doors rated up to 3 hours. These seals comply with the requirements of Underwriters Laboratories UL 10C and UBC 7-2-97, GVYI, file #R14384.

STANDARD PACK
39" (.99m) 300 pcs./carton, all others 150 pcs./carton.

COLORS
Black, white, bronze

COLOR/LENGTH	PART NO.
Black 39" (.99m)	U9862T03900
Black 86" (2.18m)	U9862T08600
White 39" (.99m)	U9863T03900
White 86" (2.18m)	U9863T08600
Bronze 39" (.99m)	U9864T03900
Bronze 86" (2.18m)	U9864T08600

NOTE: Other lengths available upon request.
Tolerance +/- 1" (25.4mm)

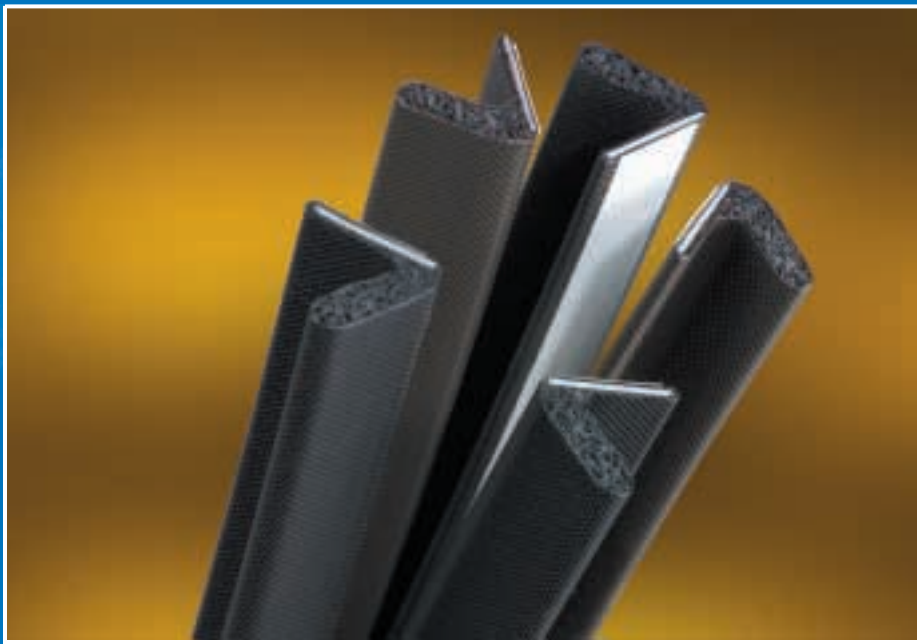

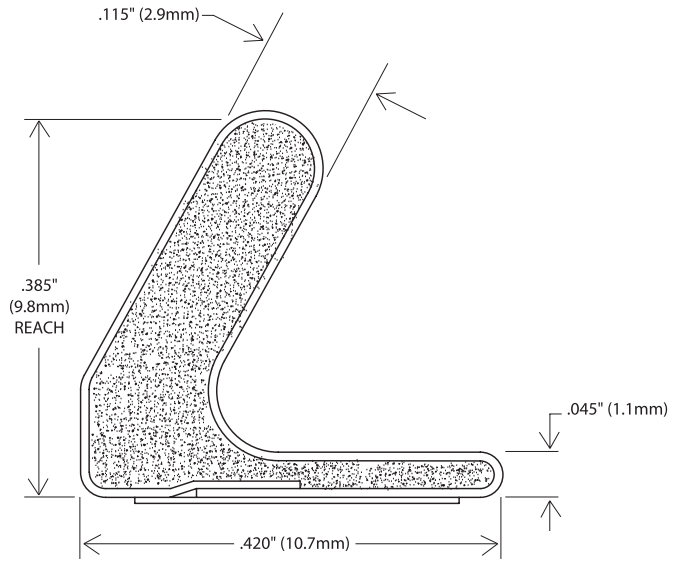

CLASSIFIED UL®
UP TO 3 HOURS

CD=COMPRESSION DIRECTION

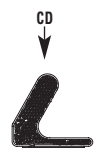

ACTUAL SIZE

Covered under Storm Shield Guarantee program. Guaranteed for the life of your door.

Q-LON® QFS 375 DOOR SEAL (ADHESIVE BACKED)

Q-LON Door Seal is made of an open-cell urethane foam core and clad in an embossed polyethylene, U.V. stablized, paint-resistant liner for kerfless applications.

Schlegel®

QFS 375

	LINEAL SHRINKAGE	
	%	Q-LON PERFORMANCE
Q-LON door seals	0.10	—
Knock-off door seals	1.10	11.0 times better
TPE magnetic seals	0.40	4.0 times better

	COMPRESSION SET	
	%	Q-LON PERFORMANCE
Q-LON door seals	5	—
Knock-off door seals	17	3.4 times better
Closed-cell foam seals	13	2.6 times better
TPE compression seals	25	5.0 times better
TPE magnetic seals	50	10.0 times better

PRODUCT HIGHLIGHTS

FEATURE	BENEFIT
Highly engineered embossed polyethylene liner	Resists paints and varnishes. Long lasting. Maintains an attractive appearance.
UV stabilized	Stable in sunlight (UV stable). Tested up to 5,000 Kj/m^2 with no visible degradation.
Resilient urethane open-celled foam	Shape and resiliency are retained over time. Offers excellent all-temperature sealing performance. No corner leaks. Seal conforms to uneven surfaces.
Applied to surface with Pressure Sensitive Adhesive	Mounts to any surface with high quality adhesive.

Q-LON DOOR SEAL TEST DATA

WATER INFILTRATION Passed water penetration tests at 25 mph (40km/h) and 34 mph (55km/h) ASTM E-331 standard test method.

WATER ABSORPTION No visible effects in degradation; water absorption negligible after being submerged in water for 24 hours and then exposed to -30° F (-34° C) for one week. Compressed 50% upon removal from the freezer. (Tested at Schlegel Testing Laboratories.)

Schlegel®

Schlegel Systems, Inc.
1555 Jefferson Road
Rochester, New York
14692-3197

800.586.0354 Toll free
585.427.9993 Fax

www.schlegel.com
e-mail: bpdproducts@schlegel.com

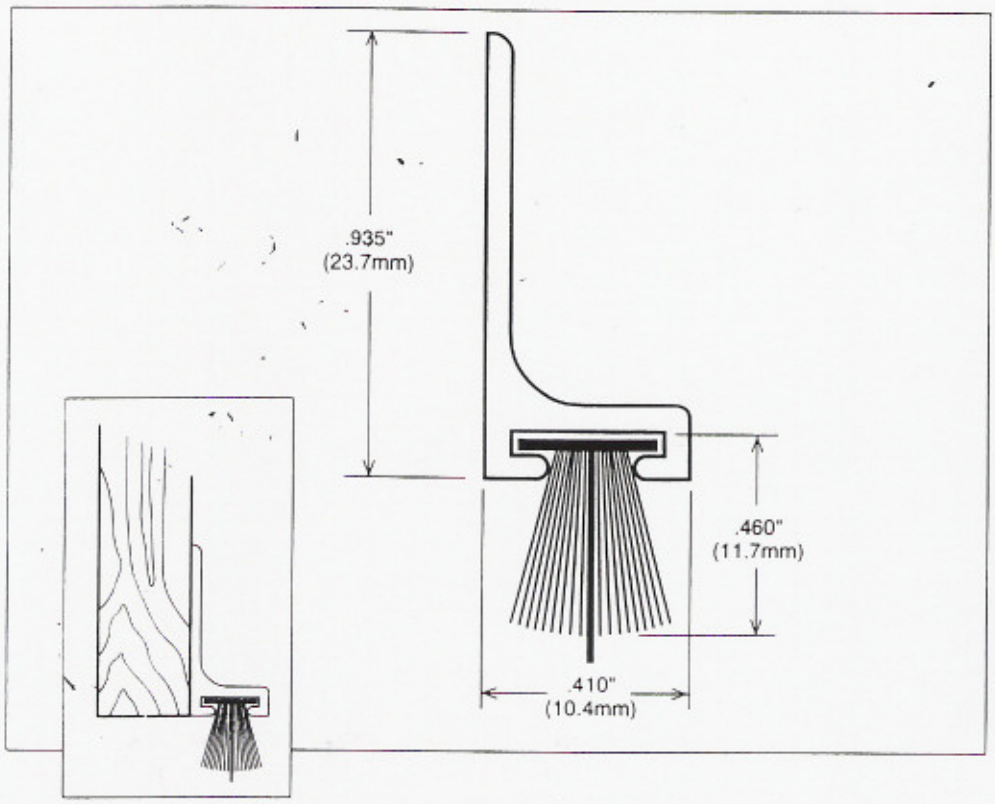

Door Sweep

Mounts on interior or exterior face of door.
Fills gaps from 1/16" to 5/16".
(1.6mm to 7.9mm).

Part Name: Door Sweep

Application: Swing Door

Material: Aluminum
Also available in anodized bronze aluminum

Compression: Recommended 30%
Minimum 10%
Maximum 50%

Installation: Mounts on interior or exterior face of door

Standard Pack: 50 pieces per carton

Colors: Mill or bronze

LENGTH/COLOR	PART NO.
36" (.91m) Mill	7595-276A-5
84" (2.13m) Mill	7595-276D-9
144" (3.66m) Mill	7595-276C-1
36" (.91m) Bronze	7595-330A-8
84" (2.13m) Bronze	7595-330D-2
144" (3.66m) Bronze	7595-330C-4

Prepunched holes for easy installation and adjustment. Includes screws.

Schlegel®
1-800-586-0354
Rapid Response Fax 1-716-427-9993
bpssproducts@schlegel.com

SEALEZE®
Problem solved.

Weatherseal Applications

Contents

About Us

Sealeze solves problems to help our customers succeed. The means: brush. The end: results.

"Customers first" at Sealeze isn't just lip service. We understand what is important to our customers: quality products that solve their problems, short lead times, fast quotes, and promised delivery dates that can be counted on. Everything we do is to meet a single end – meeting all our customer's needs and expectations.

We create solutions that address specific needs. We continually raise the bar for customer-focused innovation, drawing on a highly-skilled staff with a unique problem-solving mindset, and the broadest inventory of brush sizes, filament types, and materials in the industry.

Sealeze got its start in the 1970s as the first US distributor of strip brush for weatherseal applications. In the years since, we have become the foremost innovator in brush solutions for a broad range of applications. Sealeze joined the Jason Incorporated family of companies in 1999.

ISO 9001 Certified
Sealeze has been ISO certified since 1997 and today holds ISO 9001 certification. Everyone at Sealeze is part of the ISO experience – marketing, sales, accounting, purchasing, engineering, customer service, shipping/receiving, and manufacturing. It is not just a manufacturing system, but a company-wide way of doing business that puts the needs of our customers as the focus of what we do. ISO is not just a one-time event, it is one step in a continuous improvement process that also utilizes Lean Manufacturing principles to reduce waste and improve quality.

Help and How to Order

General Ordering

The following information for each part number will be needed when placing your order:

1. Part number, including brush length.
2. Whether or not slots and screws are required.
3. Length of the part in feet and inches.
4. Number of pieces.

Contact Us

For immediate answers and free samples*:

- Call: 800.446.7325
  804.743.1218
- Fax: 800.448.2908
  804.743.3413
- Visit: www.sealeze.com
- Email: weatherseal@sealeze.com

Therm-L-Brush® is made from 100% type-6 black nylon filament. Proseal is made of polypropylene filament. Our aluminum extrusions are stocked in the following finishes: CLA (clear satin anodized), DUR (duranodic), and GLD (polished brass anodized).

Order YOUR way to promote easy installations:

- Stocked Length: Therm-L-Brush and all Sealeze products are available directly from stock for immediate shipment in stocked lengths. Current stock lengths are 3, 7, 8 and 10 feet. (Length availability varies by products.)
- Custom Cut-To-Length: We will custom cut our weatherseals to the lengths you need—usually at no additional charge. Contact your sales representative with your requirements.
- Stocked Kits: Therm-L-Brush for entrance doors and residential garage doors is stocked in kit form in selected part numbers. Kits are poly-bagged and include the following:
  - Pre-cut weatherseals
  - Slotted holder flanges for adjustable installation
  - Self-drilling screws for fast installation
  - Instructions

Contact your sales representative for availability.

- Custom Kits: If you need custom door kits for non-standard size doors, call your sales representative with your requirements. We'll work with you!
- Shipping†: Small orders of lengths 8 feet and under are shipped UPS unless specified otherwise. Orders with lengths over 8 feet must go by truck. To save minimum freight charges on small orders, consider having lengths longer than 8 feet cut in half or some other combination in order to save on freight costs by shipping UPS.

For questions and assistance, please call your sales representative for expert advice!

** A 4 inch sample of a brush and holder will be sent to you following a discussion with a Sealeze sales representative regarding your application requirements.*
† Therm-L-Brush is shipped with slots and self-drilling TEK screws with Phillips/hex drive slots. UL Labels are applied upon request.

Why Brush Weatherseal is Better

Doors are installed to close an opening, to keep inside air in and outside air out. However, for proper operation, doors need clearance. This clearance creates a gap that allows air infiltration. Installing Therm-L-Brush® Weatherseal is the most effective means to prevent air infiltration, thus saving money on heating and cooling costs.



Color of holders shown are approximate.

Why Sealeze Brush Weatherseal?

A ⅛ inch gap around a standard 3 x 7 foot entrance door is equivalent to a hole with an area of 30 square inches. Sounds drafty, doesn't it? Therm-L-Brush will put an end to that draft!

A ¼ inch gap on the sides and top of a 10 x 10 foot sectional door is equivalent to a hole with the area of 90 square inches. Imagine what else could be coming in with the wind! Therm-L-Brush Weatherseals prevents unwanted pests.

An unsealed 10 x 10 foot sectional door can permit 328 million cubic feet of air infiltration in a year. Think of all the money being spent on heating and cooling costs. Therm-L-Brush Weatherseals will more than pay for itself.

Why prevent air infiltration?

Air infiltration means that outside air is displacing inside air. And every cubic foot of infiltrated air will be heated or cooled at someone's expense. With air infiltration comes a host of unwanted elements including dust, sand, rain and snow, noise and fumes, birds, bats, insects and rodents. Effective weather sealing with brush keeps all of these outside where they belong and helps reduce heating and cooling costs.

Why use Therm-L-Brush Weatherseal?

It is simply the best weatherseal, effectively blocking 98.5% of air infiltration. It is at least three times more effective than vinyl, and rarely needs to be replaced. Therm-L-Brush will not interfere with the operation of the door. A study by the U.S. Navy on energy conservation found Therm-L-Brush to be the superior weatherseal material.

How does it work?

Therm-L-Brush is a dense wall of nylon filaments bound securely by a strip of galvanized steel and held in an aluminum holder. This wall of nylon forms an almost air-tight barrier. It is flexible, allowing unimpeded door movement. It will not tear or pull out and conforms to surface irregularities maintaining a complete weather tight seal for the life of the door.

It's better.

Therm-L-Brush lasts longer and seals better than vinyl, felt, neoprene, silicone, or any other weatherstrip product.

It's easy to install.

Therm-L-Brush aluminum holders come slotted with self-drilling TEK-type screws for quick, low-cost installation. When using double backed tape, installation takes seconds.

It's attractive.

Therm-L-Brush comes in a variety of holder and brush color combinations that complement any door. The aluminum holders are available in a clear anodized finish, a gold anodized finish, or a dark brown duranodic finish. Brush filaments are stocked in black.

It's UL 3-Hour Fire Door rated.

Sealeze Nylon Therm-L-Brush up to 4 inces long are UL labeled upon request) for use on 3-hour fire doors.

It lasts the longest.

Independent laboratory testing has proven our brush to stands up to 2,000,000 cycles (opening and closing) without degradation. Nylon filaments give Therm-L-Brush unmatched flexibility and durability. Not only does it to conform to all surface contours for a complete seal but, it won't tear like solid sealing materials can. Therm-L-Brush can last the life of the door, rarely needing to be replaced. The nylon holds up to the weather like nothing else. Installations of 10-15 years are the rule, not the exception.

It works in extreme temperatures. even at 70° below.

In the coldest climates, where vinyl and other materials can freeze and become brittle, Sealeze Therm-L-Brush will stay flexible.

It blocks light.

It's ideal for sealing doors to light-sensitive areas and for use around warehouses and food preparation areas to keep out pests. With no light visible, there is less of a chance of attracting pests.

It blocks sound.

Independent laboratory tests shows Sealeze Therm-L-Brush effectively reduces sounds that can come through the openings around interior and exterior doorways.

Brush Weatherseal for Entrance Doors

The importance of sealing openings in a building applies to entrance doors just as it does to overhead doors. Any gap around a door causes energy loss due to air infiltration. Dirt and debris are just as much of a problem. Brush designed as Door Bottom Seals and Door Jamb Seals provide the most effective means of solving these problems. Mounted using special finished holders, brush weatherseals provide an attractive and effective solution to gaps for any door. And, Sealeze AstraSweep® corner seals when used with Sealeze door sweeps and astragal seals, provide a more complete seal by closing the gap between the sweep and astragal.

Keeps out: drafts, light, insects, noise, dust, sand, wind, rain, snow, sleet, fumes and rodents

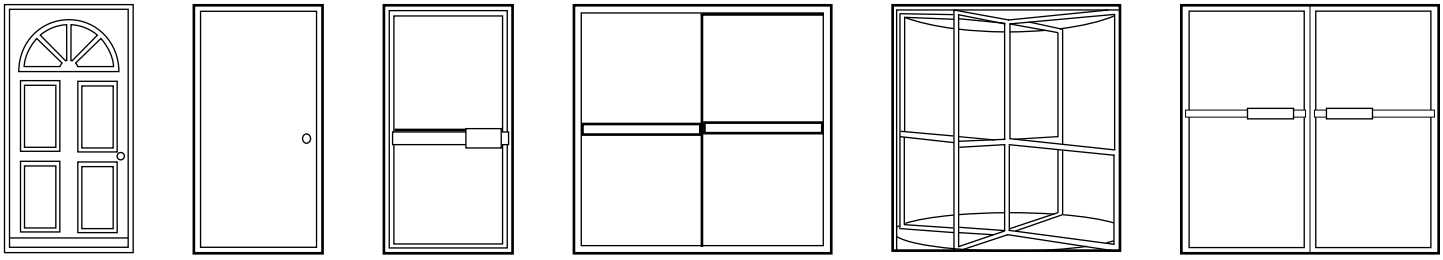

Kits

Most Sealeze weatherseal products are stocked in kits for standard size entrance doors. Kits are available for sweeps, door header and jamb seals, astragal seals and AstraSweep kits which include astragal, sweep and corner seals for a more complete seal around double doors. Kits are pre-cut to size: holders are pre-slotted with self-drilling screws for fast, easy installation. Kits are packaged in clear poly bags with instructions. Easy to stock, easy to use!

Custom Kits

For special door sizes or configurations, Sealeze will custom-cut weatherseal to your specifications and package in clear poly bags.

Bulk*

Weatherseals are also available in bulk to package yourself, or to keep on hand so you can cut to fit as needed.

Cut To Order*

For special door sizes or configurations, Sealeze will custom cut weatherseals to your specifications.

Double Backed Tape

For the fastest installation use our double backed adhesive tape. This makes installation time a matter of seconds and holds securely without screws. It is available in two forms: applied to the weatherseal holder, or in rolls. Weatherseal with applied double backed tape is not slotted.

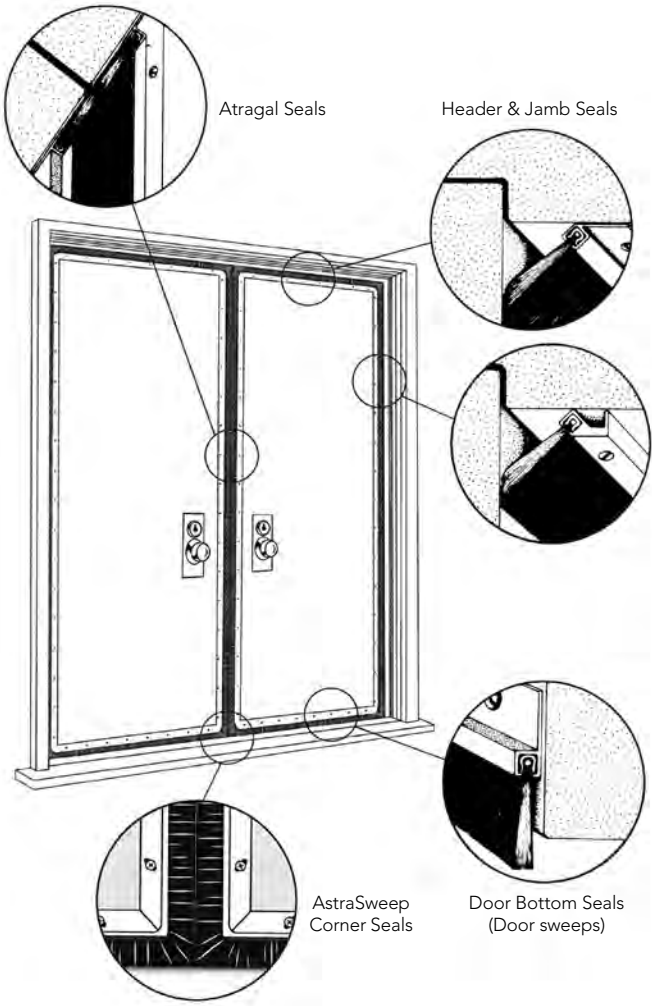

** When ordering please specify: piece length, number of pieces.*

All dimensions in inches, unless otherwise indicated.
Dimensions are to Sealeze manufacturing tolerances. Contact us for more information on tolerances.

Door Sweeps

Brush weatherseals are ideal for sealing the irregular surfaces of thresholds at door bottoms, conforming to the surface while not impairing the door's movements. Select the right brush and holder, based on the size of the gap to be sealed and the desired appearance of the holder.

CLASSIFIED UL 28H6

Sealeze Nylon Therm-L-Brush up to 4 inches long are UL labeled for use on 3-hour fire doors.

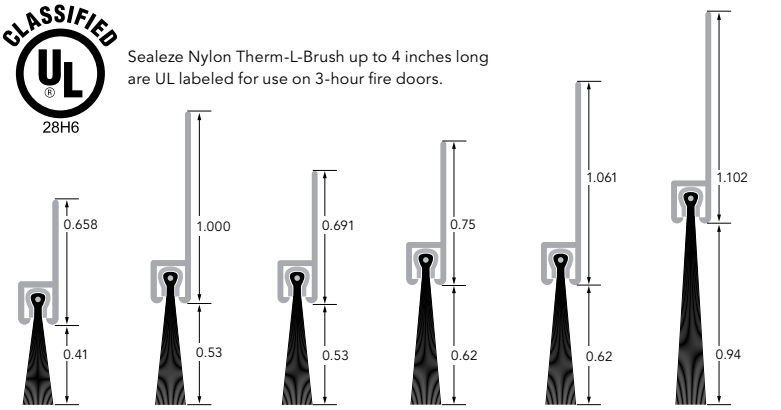

A180CLA04BL
A180DUR04BL
A180GLD04BL

B210CLA05BL
B210DUR05BL

B280CLA05BL

C380CLA06BL
C380DUR06BL
C380GLD06BL

C381CLA06BL

D480CLA09BL
D480DUR09BL

Product Code	Brush Length	Holder Length	Stock Length (feet)
A180CLA04BL	0.41	0.658	7, 8, 10
A180DUR04BL	0.41	0.658	7, 10
A180GLD04BL	0.41	0.658	10
B210CLA05BL	0.53	1.000	3, 7, 10
B210DUR05BL	0.53	1.000	10
B280CLA05BL	0.53	0.691	10
C380CLA06BL	0.62	0.750	3, 7, 10
C380DUR06BL	0.62	0.750	10
C380GLD06BL	0.62	0.750	12
C381CLA06BL	0.62	1.061	8, 10
D480CLA09BL	0.94	1.102	3, 7, 8, 9, 10, 12
D480DUR09BL	0.94	1.102	8, 10, 12

Door Sweep Kits

Aluminum door sweeps in both clear and duranodic finish with black brush are the perfect complement to their corresponding door jamb seals. The aluminum holders are pre-slotted for ease of installation and sweeps are prepackaged with fasteners for 3 ft., 3.5 ft. and 4 ft. doors.

Kit Product Code	Brush Length*	Door Bottom Width (feet)
A180CLA04BL3	0.41	3
A180CLA04BL3.5	0.41	3.5
A180CLA04BL4	0.41	4
A180DUR04BL3	0.41	3
A180DUR04BL3.5	0.41	3.5
A180DUR04BL4	0.41	4
A180GLD04BL3	0.41	3
A180GLD04BL3.5	0.41	3.5
A180GLD04BL4	0.41	4
B210CLA05BL3	0.53	3

Kit Product Code	Brush Length*	Door Bottom Width (feet)
B210CLA05BL3.5	0.53	3.5
B210CLA05BL4	0.53	4
B210DUR05BL3	0.53	3
B210DUR05BL3.5	0.53	3.5
B210DUR05BL4	0.53	4
C380CLA06BL3	0.62	3
C380CLA06BL3.5	0.62	3.5
C380CLA06BL4	0.62	4
C380DUR06BL3	0.62	3
C380DUR06BL3.5	0.62	3.5

Kit Product Code	Brush Length*	Door Bottom Width (feet)
C380DUR06BL4	0.62	4
C380GLD06BL3	0.62	3
C380GLD06BL3.5	0.62	3.5
C380GLD06BL4	0.62	4
D480CLA09BL3	0.94	3
D480CLA09BL3.5	0.94	3.5
D480CLA09BL4	0.94	4
D480DUR09BL3	0.94	3
D480DUR09BL3.5	0.94	3.5
D480DUR09BL4	0.94	4

**All products are available in different brush lenghts. Call for assistance with your special application.*

How to Select the Right Door Sweep

What size gap are you sealing?	Look at these items:
Up to ⅜"	Starting with the letter "A"
Up to ½"	Starting with the letter "B"
Up to 9⁄16"	Starting with the letter "C"
Up to 1"	Starting with the letter "D"
What color should the holder be?	Look at these items:
Clear Satin (silver in color)	Items with the letters "CLA" in the middle
Bronze (dark brown in color)	Items with the letters "DUR" in the middle
Polished Brass (gold in color)	Items with the letters "GLD" in the middle

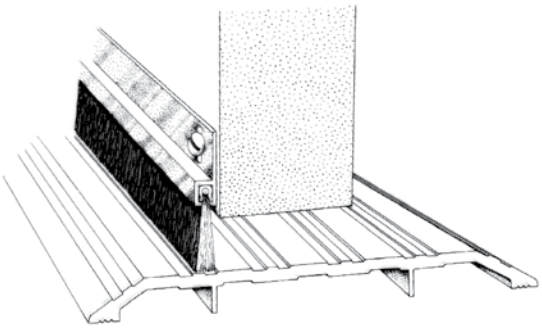

All dimensions in inches, unless otherwise indicated.
Dimensions are to Sealeze manufacturing tolerances. Contact us for more information on tolerances.

Jamb Seals & Kits

Aluminum door jamb holders are available in clear (silver color), duranodic (brown color) and polished brass (gold color) finishes. These holders are available for doors 3', 4', and 6' wide by 7' high. Kits come with screw slots for after-installation adjustment or with counter-sunk holes for a neat, flush finish. Aluminum door jamb holders are available in clear (silver color), duranodic (brown color) and polished brass (gold color) finishes.

UL listed jamb kits provide reliable seals without restricting automatic door closers. Tested for 2,000,000 cycles by Scovill Laboratories, these high-quality brush seals provide long-lasting, cost-effective service.

Jamb Seals

Product Code	Brush Length	Holder Length	Holder Angle	Finish Color	Stock (feet)
JR40CLA04BL	0.41	0.375	40°	Clear Anodized	7, 8, 9, 10
J135CLA04BL	0.41	0.450	35°	Clear Anodized	7, 10
J135DUR04BL	0.41	0.450	35°	Duranodic	10
J135GLD04BL	0.41	0.450	35°	Gold Anodized	7
J140CLA04BL	0.41	0.750	40°	Clear Anodized	7, 8, 10
J140DUR04BL	0.41	0.750	40°	Duranodic	7, 10

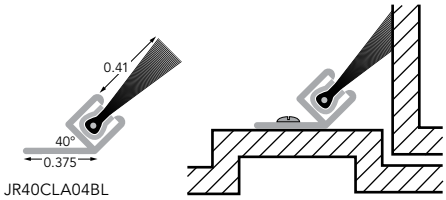

JR40CLA04BL

Jamb Seal Kits (Stock Items)

Product Code	Brush Length	Door Size (feet)	Finish Color
JR40CLA04BL17	0.41	3 X 7	Clear Anodized
JR40CLA04BL18	0.41	4 X 7	Clear Anodized
JR40CLA04BL20	0.41	6 X 7	Clear Anodized
J135CLA04BL17	0.41	3 X 7	Clear Anodized
J135CLA04BL18	0.41	4 X 7	Clear Anodized
J135CLA04BL20	0.41	6 X 7	Clear Anodized
J135DUR04BL17	0.41	3 X 7	Duranodic Finish
J135DUR04BL18	0.41	4 X 7	Duranodic Finish
J135DUR04BL20	0.41	6 X 7	Duranodic Finish
J135GLD04BL17	0.41	3 X 7	Gold Anodized
J135GLD04BL18	0.41	4 X 7	Gold Anodized
J135GLD04BL20	0.41	6 X 7	Gold Anodized
J140CLA04BL17	0.41	3 X 7	Clear Anodized
J140CLA04BL18	0.41	4 X 7	Clear Anodized
J140CLA04BL20	0.41	6 X 7	Clear Anodized
J140DUR04BL17	0.41	3 X 7	Duranodic Finish
J140DUR04BL18	0.41	4 X 7	Duranodic Finish
J140DUR04BL20	0.41	6 X 7	Duranodic Finish

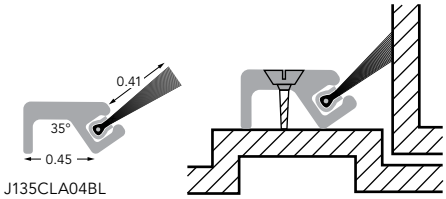

J135CLA04BL
J135DUR04BL
J135GLD04BL

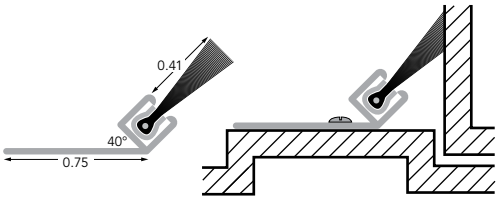

J140CLA04BL
J140DUR04BL

Brush lengths also available in 0.75" and 1.00".

JR40 and J140 kits come with screw slots for after-installation adjustments. J135 kits have counter-sunk screw holes for a neat, flush finish. Fasteners and installation instructions are provided with all kits.

Selecting The Right Door Jamb

What color do you need? ..... Select:

Clear Satin (silver in color)..... Items with letters "CLA" in the middle
Bronze (dark brown in color) .... Items with the letters "DUR" in the middle
Polished Brass (gold in color)... Items with the letters "GLD" in the middle

What size is the door? ..... Select:

3' x 7'..... Item with product code ending in 17
4' x 7'..... Item with product code ending in 18
6' x 7'..... Item with product code ending in 20

What style holder should be used?

It's strictly a matter of preference. Our JR40 extrusion is the smallest, offering a .375" flange at a 40° angle. The J140 extrusion is slightly larger with a .75" flange at a 40° angle while the J135 extrusion brings a more "finished" look to your jambs with a .45" flange at a 35° angle.

All dimensions in inches, unless otherwise indicated.
Dimensions are to Sealeze manufacturing tolerances. Contact us for more information on tolerances.

Astragal Seals for Wood and Metal Doors

Therm-L-Brush® is perfect for astragal applications when closing the gap between two doors is necessary. Fourteen and sixteen foot standard kits, available in our A180 or C380 product codes, come poly-bagged to include fasteners and installation instructions for wood doors. Metal doors are sealed just as quickly when our weatherseals are applied by using double backed tape.

Astragal Seals

Product Code	Brush Length	Straight Holder Length	Stock Length (feet)
A180CLA04BL	0.41	0.658	7, 8
A180DUR04BL	0.41	0.658	7, 8
A180GLD04BL	0.41	0.658	7, 8
C380CLA06BL	0.62	0.750	7, 8
C380DUR06BL	0.62	0.750	7, 8
C380GLD06BL	0.62	0.750	7, 8

Astragal Kits

Kit Product Code	Brush Length	Door Height (feet)
A180CLA04BL14	0.41	7
A180DUR04BL14	0.41	7
A180GLD04BL14	0.41	7
C380CLA06BL14	0.62	7
C380DUR06BL14	0.62	7
C380GLD06BL14	0.62	7
A180CLA04BL16	0.41	8
A180DUR04BL16	0.41	8
A180GLD04BL16	0.41	8
C380CLA06BL16	0.62	8
C380DUR06BL16	0.62	8
C380GLD06BL16	0.62	8

Top View

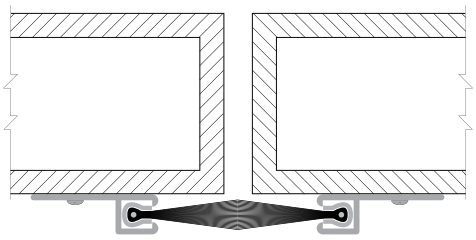

AstraSweep™ Kits

Sealeze AstraSweep corner seals seal the hole between the astragal seal and the door sweep. AstraSweep Kits include two corner seals, two door sweeps and two astragal seals–all the materials necessary to seal the inside (gaps up to 1 inch) and bottoms of a double door. Holders are pre-slotted for easy installation.

Kit Product Code	Door Size (W x H, feet)	Finish Color
C380CLA06BL67	6 x 7	Clear Anodized
C380DUR06BL67	6 x 7	Duranodic
C380CLA06BL68	6 x 8	Clear Anodized
C380DUR06BL68	6 x 8	Duranodic
C380CLA06BL77	7 x 7	Clear Anodized
C380DUR06BL77	7 x 7	Duranodic
C380CLA06BL78	7 x 8	Clear Anodized
C380DUR06BL78	7 x 8	Duranodic
C380CLA06BL87	8 x 7	Clear Anodized
C380DUR06BL87	8 x 7	Duranodic
C380CLA06BL88	8 x 8	Clear Anodized
C380DUR06BL88	8 x 8	Duranodic

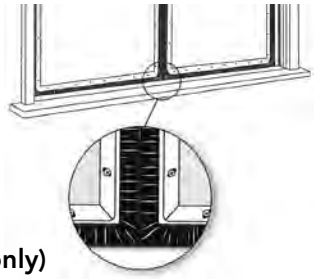

AstraSweep (corner seal only)

(includes 2 seals for size "C" door sweep and astragal seal)

Kit Product Code	Finish Color
C38090CLA06BLKP	Clear Anodized
C38090DUR06BLKP	Duranodic

All dimensions in inches, unless otherwise indicated.
Dimensions are to Sealeze manufacturing tolerances. Contact us for more information on tolerances.

Brush Weatherseals for Overhead Doors

To minimize air and dirt infiltration around rolling steel, sectional and sliding overhead doors, install the best weatherseals available. Sealeze Brush Weatherseal's unique property of conforming to irregular surfaces provides the most effective sealing. Thousands of filaments form a solid wall for a complete weather-tight seal without impairing door movement. Order with slots & screws, or with easy-to-install double backed tape.

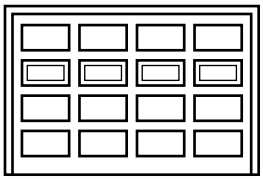

Residential

Rolling Steel

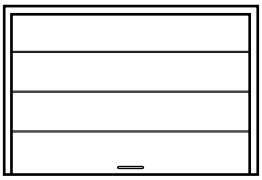

Sectional

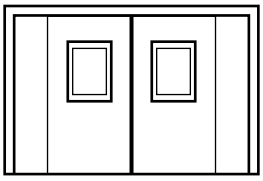

High Speed

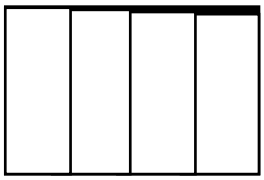

Sliding Aircraft Hangar

Side view of Header Seal

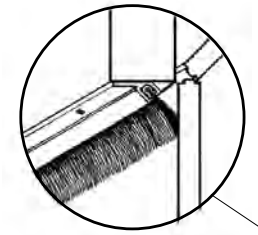

Use angled holder so top of door closes into brush for tight seal.

Side view of Header Seal

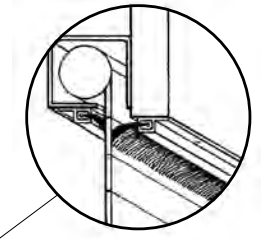

Straight holder mounts on inside of door or mounts to header exterior. Brush outlasts the vinyl flap that comes with most installations and keeps out birds, bats and insects.

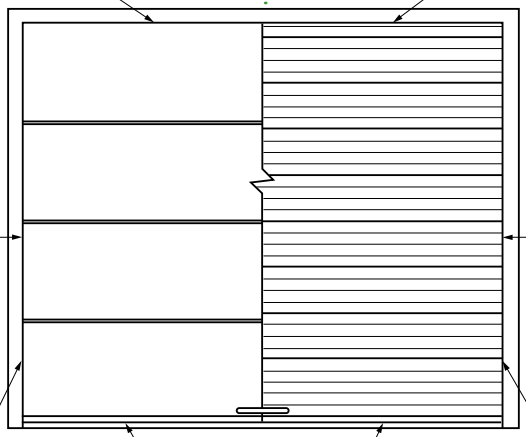

Top view of Jamb Seal

Use angled holder on jambs. Brush fills all corrugations for complete seal.

Top view of Jamb Seal

Behind-Wall Installation: Use angled holder on jambs.

Top view of Jamb Seal

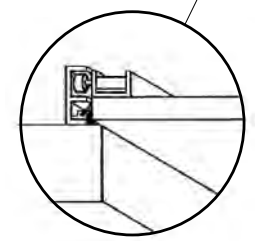

Angled holder can be mounted on inside so brush seals against edge of door. Inside mount hides seal and prevents potential impact damage. Use double backed tape for easiest installation.

Side view of Door Bottom Seal

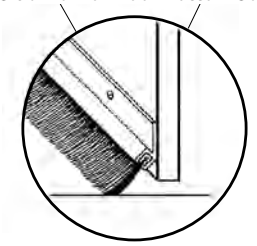

Mount angled holder across door bottom so brush flexes on to pavement to complete all around sealing of door.

Top view of Jamb Seal

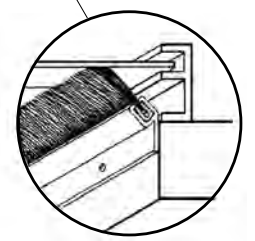

Behind-Wall Installation: Use reverse angled holder on guides.

Keeps out Drafts • Rain • Snow • Wind • Sand • Debris • Light • Noise • Insects • Rodents • Birds • Bats

C-134

All dimensions in inches, unless otherwise indicated.
Dimensions are to Sealeze manufacturing tolerances. Contact us for more information on tolerances.

Light Duty

Light-duty brush seals are ideal for residential and commercial sectional doors.
JR40 and J140 are available in kits for 9 X 7 ft. and 16 X 7 ft. garage doors.

Product Code	Brush Length	Holder Length	Holder Angle
JR40CLA08BL	0.75	0.375	40°
JR40CLA10BL	1.00	0.375	40°
J140CLA08BL	0.75	0.750	40°
J140DUR08BL	0.75	0.750	40°
J140CLA10BL	1.00	0.750	40°
J140DUR10BL	1.00	0.750	40°
B230CLA10BL	1.00	0.862	30°
B210CLA10BL	1.00	1.000	180°
B210DUR10BL	1.00	1.000	180°
C380CLA10BL	1.00	0.750	180°
C380DUR10BL	1.00	0.750	180°
C380GLD10BL	1.00	0.750	180°

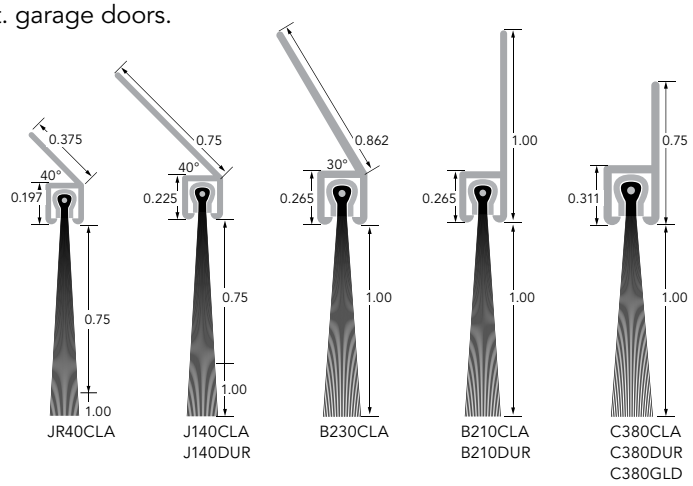

Standard Duty

Standard duty brush seals are the perfect seal for all sectional, rolling steel, and other service doors. Sealeze "D" series is synonymous with quality, energy-saving and value. Available in brush lengths from 1 to 3 inches.

Product Code	Brush Length	Holder Length	Holder Angle
D480CLA09BL	0.94	1.102	180°
D480DUR09BL	0.94	1.102	180°
D480CLA12BL	1.19	1.102	180°
D480DUR12BL	1.19	1.102	180°
D480CLA16BL	1.61	1.102	180°
D480DUR16BL	1.61	1.102	180°
D480CLA20BL	2.00	1.102	180°
D480DUR20BL	2.00	1.102	180°
D480CLA30BL	3.00	1.102	180°
D480DUR30BL	3.00	1.102	180°
D482CLA09BL	0.94	1.891	180°
D482CLA12BL	1.19	1.891	180°
D482CLA16BL	1.61	1.891	180°
D482CLA20BL	2.00	1.891	180°
D482CLA30BL	3.00	1.891	180°
D483CLA09BL	0.94	3.391	180°
D483CLA12BL	1.19	3.391	180°
D483CLA16BL	1.61	3.391	180°
D483CLA20BL	2.00	3.391	180°
D483CLA30BL	3.00	3.391	180°
D445CLA09BL	0.94	0.844	45°
D445DUR09BL	0.94	0.844	45°
D445CLA12BL	1.19	0.844	45°
D445DUR12BL	1.19	0.844	45°
D445CLA16BL	1.61	0.844	45°
D445DUR16BL	1.61	0.844	45°
D445CLA20BL	2.00	0.844	45°
D445DUR20BL	2.00	0.844	45°
D445CLA30BL	3.00	0.844	45°
D445DUR30BL	3.00	0.844	45°
D45XCLA09BL	0.94	1.890	45°
D45XCLA12BL	1.19	1.890	45°
D45XCLA16BL	1.61	1.890	45°
D45XCLA20BL	2.00	1.890	45°
D45XCLA30BL	3.00	1.890	45°
D45RCLA09BL	0.94	1.000	45° REV
D45RCLA12BL	1.19	1.000	45° REV
D45RCLA16BL	1.61	1.000	45° REV
D45RCLA20BL	2.00	1.000	45° REV
D45RCLA30BL	3.00	1.000	45° REV

Sealeze nylon Therm-L-Brush up to 4 inches long are UL labeled for use on 3-hour fire doors.

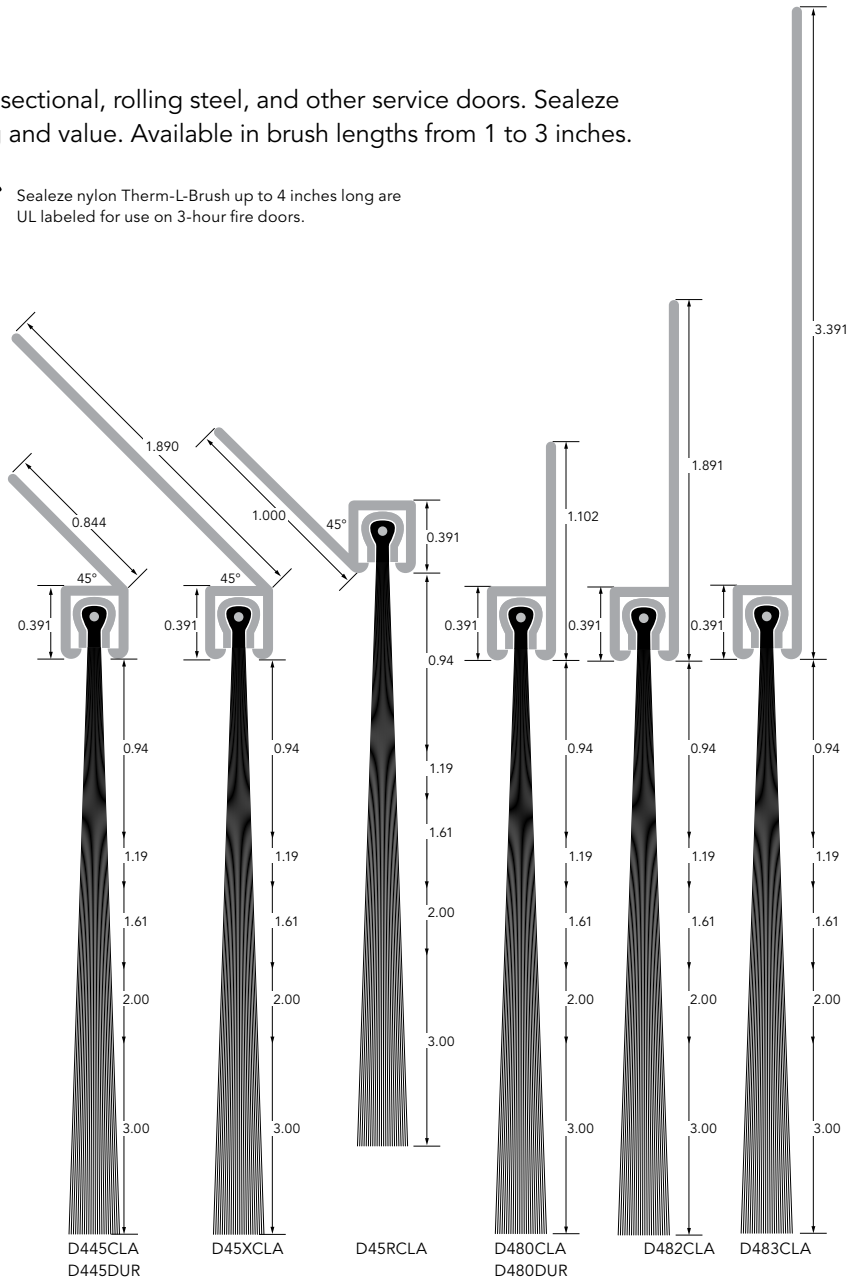

All dimensions in inches, unless otherwise indicated.
Dimensions are to Sealeze manufacturing tolerances. Contact us for more information on tolerances.

Heavy Duty

The heaviest brush seals available, Sealeze's "G" series brushes seal out the elements around large industrial rolling steel doors, sectional doors, and other large service doors, including aircraft hangar doors. Available in brush lengths up to 7". UL rating on all brushes up to 4" in length.

Product Code	Brush Length	Holder Length	Holder Angle
F580CLA15BL	1.50	1.00	180°
F580CLA20BL	2.00	1.00	180°
F580CLA25BL	2.50	1.00	180°
F580CLA30BL	3.00	1.00	180°
F580CLA40BL	4.00	1.00	180°
F580CLA50BL	5.00	1.00	180°

Product Code	Brush Length	Holder Length	Holder Angle
F582CLA15BL	1.50	1.50	180°
F582CLA20BL	2.00	1.50	180°
F582CLA25BL	2.50	1.50	180°
F582CLA30BL	3.00	1.50	180°
F582CLA40BL	4.00	1.50	180°
F545CLA15BL	1.50	1.50	45°

Product Code	Brush Length	Holder Length	Holder Angle
F545CLA20BL	2.00	1.50	45°
F545CLA25BL	2.50	1.50	45°
F545CLA30BL	3.00	1.50	45°
F545CLA40BL	4.00	1.50	45°
F545CLA50BL	5.00	1.50	45°

CLASSIFIED UL 28H6

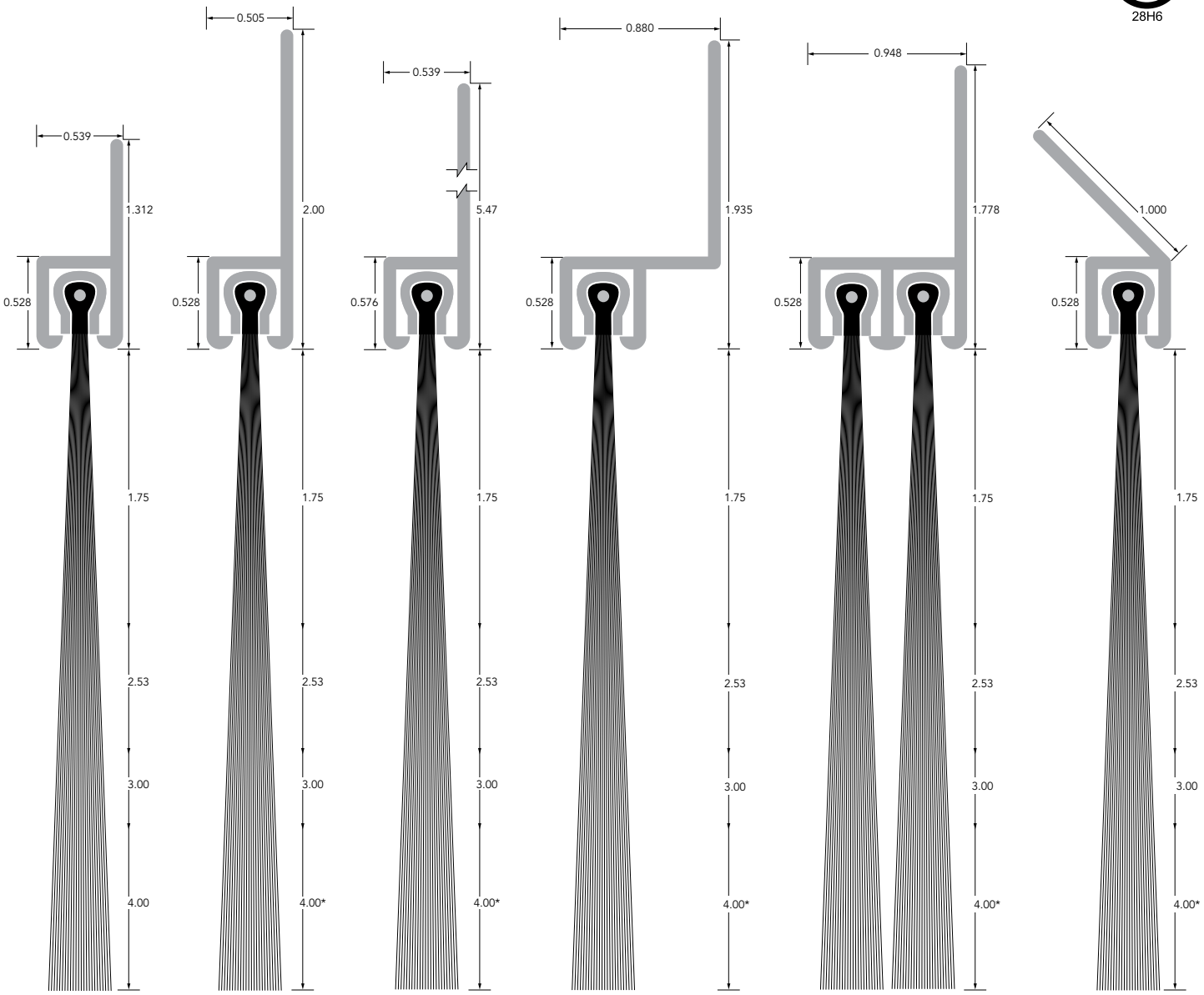

G680CLA G682CLA G685CLA G682FCLA GG680CLA G645CLA

**Brush available up to 7", UL only applies to brush up to 4".*

All dimensions in inches, unless otherwise indicated.
Dimensions are to Sealeze manufacturing tolerances. Contact us for more information on tolerances.

Heavy Duty

Sealeze "F" series brush are a cost-effective solution in many applications where the heavy density of our "G" series brush isn't needed. Available in lengths up to 5 inches, F-series brushes can seal gaps in many large door applications.

Product Code	Brush Length	Holder Length	Holder Angle
F590CLA15BL	1.50	1.47	90°
F590CLA20BL	2.00	1.47	90°
F590CLA25BL	2.50	1.47	90°
F590CLA30BL	3.00	1.47	90°
F590CLA40BL	4.00	1.47	90°
F590CLA50BL	5.00	1.47	90°
G680CLA18BL	1.75	1.312	180°
G680CLA25BL	2.53	1.312	180°
G680CLA30BL	3.00	1.312	180°
G680CLA40BL	4.00	1.312	180°
G680CLA50BL	5.00	1.312	180°
G680CLA60BL	6.00	1.312	180°
G680CLA70BL	7.00	1.312	180°
G682CLA18BL	1.75	2.00	180°
G682CLA25BL	2.53	2.00	180°
G682CLA30BL	3.00	2.00	180°
G682CLA40BL	4.00	2.00	180°
G682CLA50BL	5.00	2.00	180°
G682CLA60BL	6.00	2.00	180°
G682CLA70BL	7.00	2.00	180°
G685CLA18BL	1.75	5.470	180°
G685CLA25BL	2.53	5.470	180°
G685CLA30BL	3.00	5.470	180°
G685CLA40BL	4.00	5.470	180°
G685CLA50BL	5.00	5.470	180°
G685CLA60BL	6.00	5.470	180°
G685CLA70BL	7.00	5.470	180°
G682FCLA18BL	1.75	1.935	180° Offset
G682FCLA25BL	2.53	1.935	180° Offset
G682FCLA30BL	3.00	1.935	180° Offset
G682FCLA40BL	4.00	1.935	180° Offset
G682FCLA50BL	5.00	1.935	180° Offset
G682FCLA60BL	6.00	1.935	180° Offset
G682FCLA7OBL	7.00	1.935	180° Offset
GG680CLA18BL	1.75	1.778	180°
GG680CLA25BL	2.53	1.778	180°
GG680CLA30BL	3.00	1.778	180°
GG680CLA40BL	4.00	1.778	180°
GG680CLA50BL	5.00	1.778	180°
GG680CLA60BL	6.00	1.778	180°
GG680CLA70BL	7.00	1.778	180°
G645CLA18BL	1.75	1.000	45°
G645CLA25BL	2.53	1.000	45°
G645CLA30BL	3.00	1.000	45°
G645CLA40BL	4.00	1.000	45°
G645CLA50BL	5.00	1.000	45°
G645CLA60BL	6.00	1.000	45°
G645CLA70BL	7.00	1.000	45°

CLASSIFIED UL 28H6

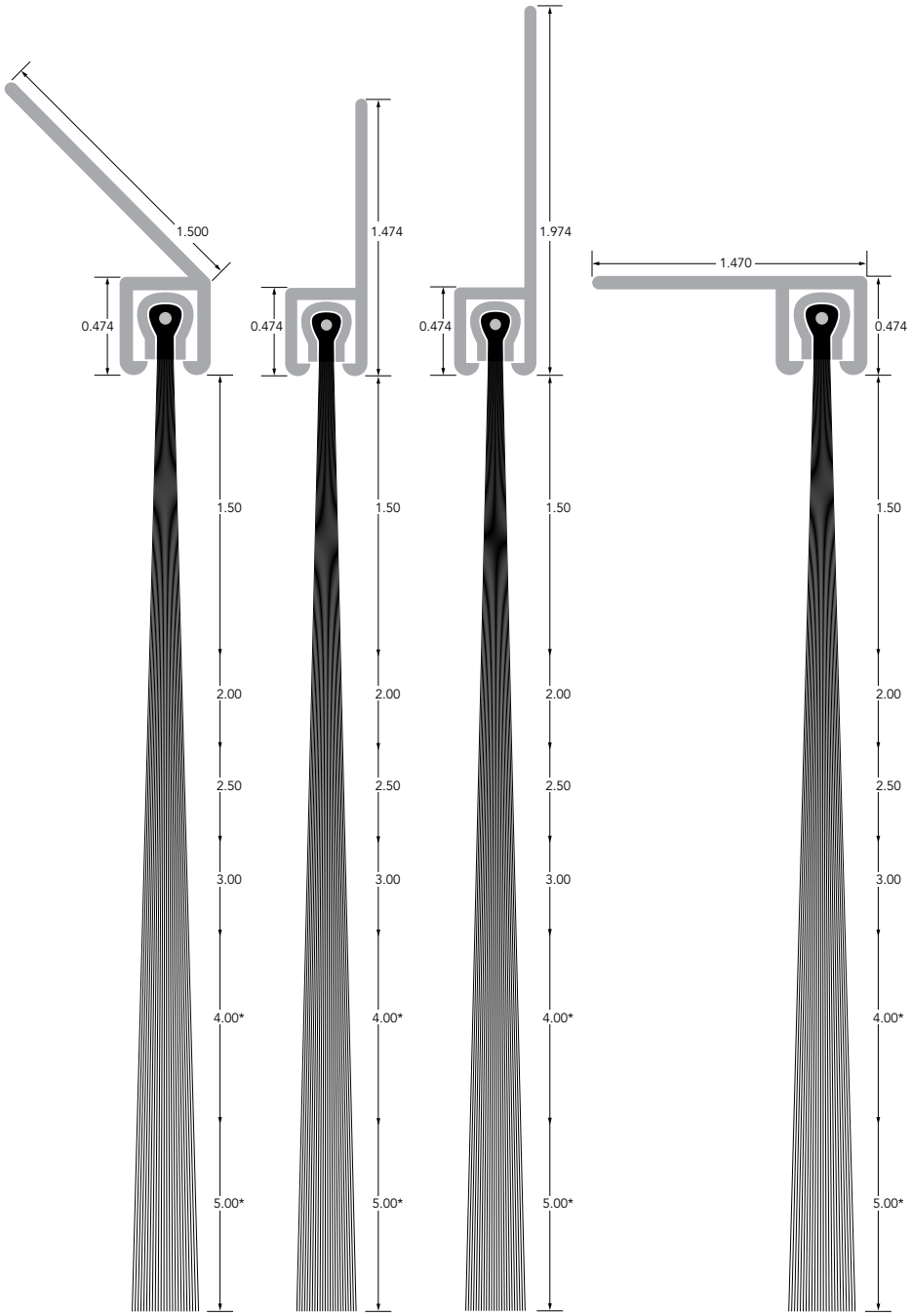

UL only applies to brush up to 4".

All dimensions in inches, unless otherwise indicated.
Dimensions are to Sealeze manufacturing tolerances. Contact us for more information on tolerances.

C-137

Plastic Guide Seal for Rolling Steel Door

Easy installation. Just slide extrusion over guide and let the brush conform to all surface irregularities. Extrusion fits 3/16" guides. Use alone or with epoxy for additional hold.

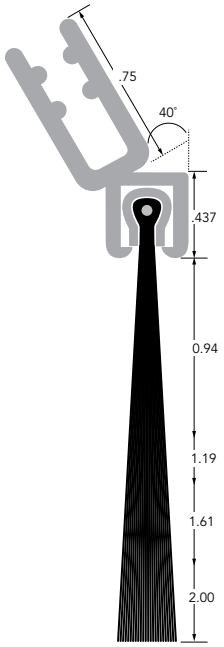

Product Code	Brush Length	Holder Length	Holder Angle
DP40PVC09BL	0.94	.75	40°
DP40PVC12BL	1.19	.75	40°
DP40PVC16BL	1.61	.75	40°
DP40PVC20BL	2.00	.75	40°
DP40PVC30BL	3.00	.75	40°

Reverse Angle Clip-On

For use on commercial sectional doors. Dual durometer construction provides a hard vinyl holding section and a flexible flap. Use in situations where price is a key consideration. Fits 1/8 inch guides. Sold in cartons of 200 feet.

Product Code	Color
RG15GRYVNYL	Gray
RG15W HTVNYL	White

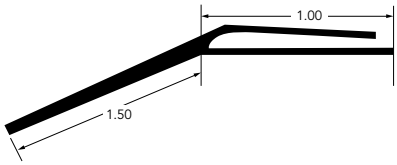

Garage Door Threshold

- Solid black vinyl garage door threshold.
- Seals out the elements.
- Prevents driving rain and snow from backing into garage.
- Helps keep out dirt and leaves.
- Keeps door bottom from direct contact with concrete to prevent rust on metal doors and water damage on wood doors.
- Easy to install: Brush or wipe concrete clean and dry below door. Rough surface with wire brush for best adhesion. Apply adhesive per instructions on tube. One tube comes with every 20 feet of threshold. Installation works best when temperatures are above 50° F.

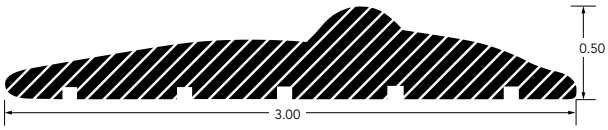

Adjustable Door Bottom

- Black Santoprene rubber.
- Won't tear or deform.
- Remains pliable in the coldest weather.
- Cushions door when closing.
- Two sizes available.
- Aluminum holder comes slotted, allowing for adjustments so it fits perfectly.

Product Code	X	Y	Z
ADB40BLK	1.75	1.00	1.5
ADB25BLK	1.375	1.00	1.0

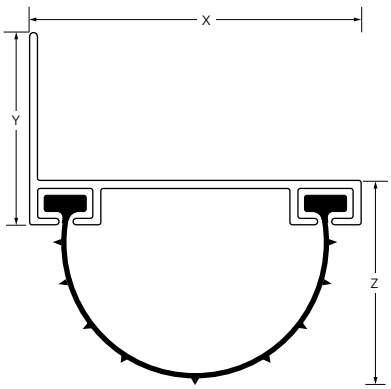

C-138

All dimensions in inches, unless otherwise indicated.
Dimensions are to Sealeze manufacturing tolerances. Contact us for more information on tolerances.

ProSeal

As a low-cost alternative to Therm-L-Brush, we also stock a line of polypropylene brushes. ProSeal brush lengths are from 1 inch to 4 inches and fit nicely into any of our "C" or "D" series holders. See chart below for holder and brush combinations available for ProSeal. Also available is a 1-3/8 inch gray vinyl flap. ProSeal brushes are available in a range of stock lengths, depending on product code.

ProSeal For Mini-Storage Doors

ProSeal size C brush and holders are an excellent choice for sealing corrugated roll-up doors in mini-storage units. It is available with straight exposed polypropylene filament in 1.0, 1.5, 2.0 and 3.0 inches for the best seal in these applications.

ProSeal for Aircraft Hangars/Barns

These crimped polypropylene brushes were developed for special use in sealing Aircraft Hangar Doors. This lower priced brush seals the large gaps usually associated with Hangar Doors while providing most of the advantages of nylon Therm-L-Brush. The brush can be combined with angled or straight holders and is available in brush trim lengths of 1.5, 2, 3, and 4 inches.

ProSeal or Therm-L-Brush, Which is for Me?

The sealing performance of Therm-L-Brush and ProSeal are comparable in most applications. Therm-L-Brush nylon filaments are more suitable for high-cycle applications. In lighter duty applications, the lower cost of ProSeal with polypropylene filaments can be considered.

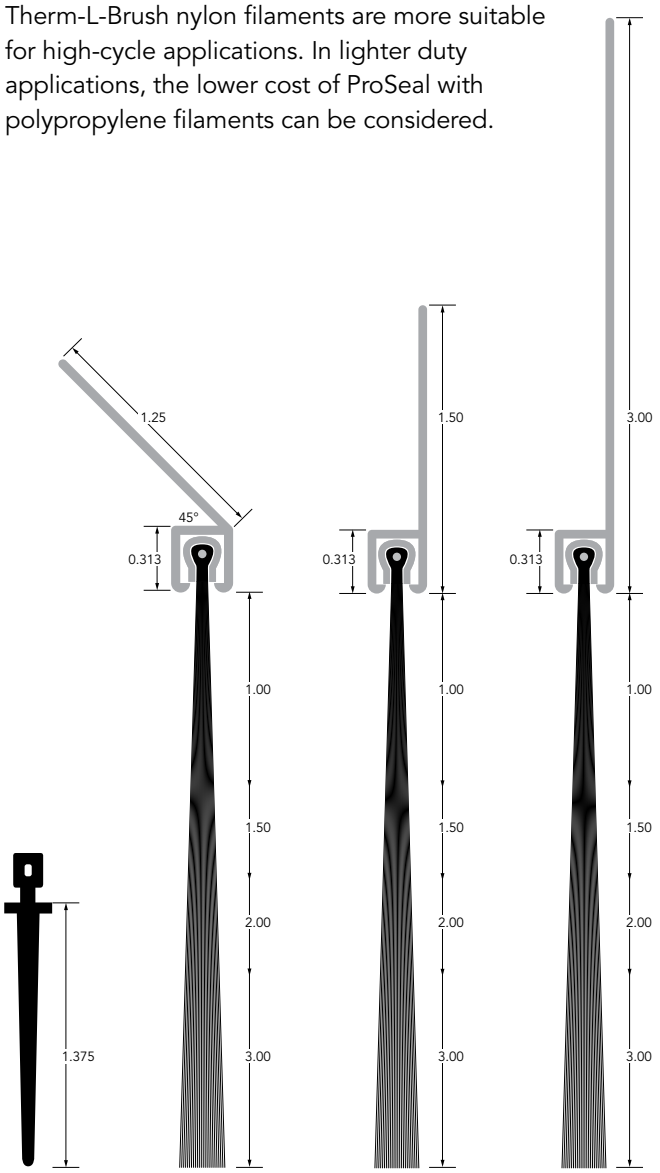

Product Code	Brush Type	Brush Length	Holder Length	Holder Angle
C382CLA10BP	Straight Polypropylene	1.00	1.813	180°
C382CLA15BP	Straight Polypropylene	1.50	1.813	180°
C382CLA20BP	Straight Polypropylene	2.00	1.813	180°
C382CLA30BP	Straight Polypropylene	3.00	1.813	180°
C383CLA10BP	Straight Polypropylene	1.00	3.313	180°
C383CLA15BP	Straight Polypropylene	1.50	3.313	180°
C383CLA20BP	Straight Polypropylene	2.00	3.313	180°
C383CLA30BP	Straight Polypropylene	3.00	3.313	180°
C345CLA10BP	Straight Polypropylene	1.00	1.250	45°
C345CLA15BP	Straight Polypropylene	1.50	1.250	45°
C345CLA20BP	Straight Polypropylene	2.00	1.250	45°
C345CLA30BP	Straight Polypropylene	3.00	1.250	45°
D480CLA15PC	Crimped Polypropylene	1.50	1.102	180°
D480CLA20PC	Crimped Polypropylene	2.00	1.102	180°
D480CLA30PC	Crimped Polypropylene	3.00	1.102	180°
D480CLA40PC	Crimped Polypropylene	4.00	1.102	180°
D482CLA15PC	Crimped Polypropylene	1.50	1.811	180°
D482CLA20PC	Crimped Polypropylene	2.00	1.811	180°
D482CLA30PC	Crimped Polypropylene	3.00	1.811	180°
D482CLA40PC	Crimped Polypropylene	4.00	1.811	180°
D483CLA15PC	Crimped Polypropylene	1.50	3.391	180°
D483CLA20PC	Crimped Polypropylene	2.00	3.391	180°
D483CLA30PC	Crimped Polypropylene	3.00	3.391	180°
D483CLA40PC	Crimped Polypropylene	4.00	3.391	180°
D445CLA15PC	Crimped Polypropylene	1.50	0.844	45°
D445CLA20PC	Crimped Polypropylene	2.00	0.844	45°
D445CLA30PC	Crimped Polypropylene	3.00	0.844	45°
D445CLA40PC	Crimped Polypropylene	4.00	0.844	45°
D45XCLA15PC	Crimped Polypropylene	1.50	1.890	45°
D45XCLA20PC	Crimped Polypropylene	2.00	1.890	45°
D45XCLA30PC	Crimped Polypropylene	3.00	1.890	45°
D45XCLA40PC	Crimped Polypropylene	4.00	1.890	45°
D45RCLA15PC	Crimped Polypropylene	1.50	1.000	45 REV°
D45RCLA20PC	Crimped Polypropylene	2.00	1.000	45 REV°
D45RCLA30PC	Crimped Polypropylene	3.00	1.000	45 REV°
D45RCLA40PC	Crimped Polypropylene	4.00	1.000	45 REV°
D490CLA15PC	Crimped Polypropylene	1.50	1.060	90°
D490CLA20PC	Crimped Polypropylene	2.00	1.060	90°
D490CLA30PC	Crimped Polypropylene	3.00	1.060	90°
D490CLA40PC	Crimped Polypropylene	4.00	1.060	90°

Specify 1", 1.50", 2", 3" brush or 1.375" vinyl.

All dimensions in inches, unless otherwise indicated.
Dimensions are to Sealeze manufacturing tolerances. Contact us for more information on tolerances.

Dock Leveler Applications

Loading docks are prime areas for sealing with brush weatherseal. Not only do the overhead doors allow air infiltration, but the dock levelers themselves can act as wind tunnels, robbing a building of its conditioned air supply. Sealeze's 90° flanges form the perfect fit for dock leveler seals and other special applications. Our "A" series is ideal for sealing small cracks, while the "G" series brush will cover the largest gaps.

Dock Leveler Seals

Product Code	Brush Length	Holder Length	Holder Angle
A190CLA04BL	0.41	0.55	90°
A190CLA10BL	1.00	0.55	90°
B290CLA05BL	0.53	0.69	90°
B290CLA10BL	1.00	0.69	90°
C390CLA06BL	0.62	0.96	90°
C390CLA10BL	1.00	0.96	90°
D490CLA09BL	0.94	1.06	90°
D490CLA12BL	1.19	1.06	90°

Product Code	Brush Length	Holder Length	Holder Angle
D490CLA16BL	1.61	1.06	90°
D490CLA20BL	2.00	1.06	90°
D490CLA30BL	3.00	1.06	90°
G690CLA18BL	1.75	1.38	90°
G690CLA25BL	2.53	1.38	90°
G690CLA30BL	3.00	1.38	90°
G690CLA40BL	4.00	1.38	90°

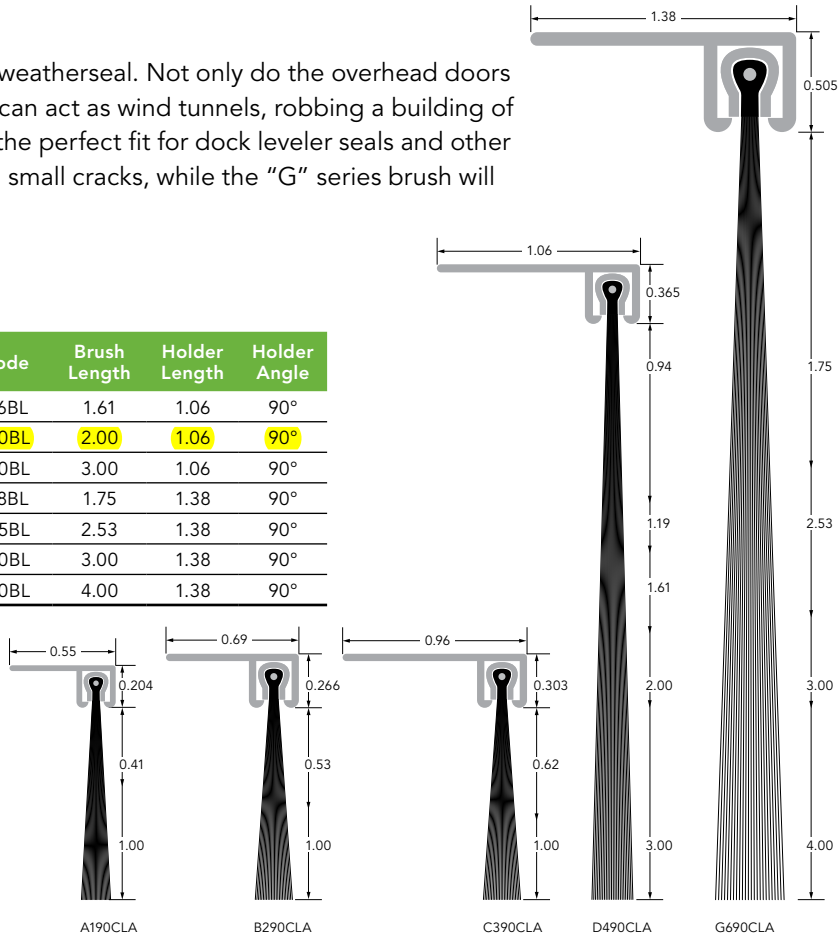

Weldable Dock Leveler Seals

Includes a steel holder that can be welded to the sides of the leveler.

Product Code	Holder Shape	Exposed Seal Length	Seal Type
BT90CLA05BLKIT8	T	0.500	Brush
BT90CLA10BLKIT8	T	1.000	Brush
BT90CLA14BLKIT8	T	1.375	Brush
BT90CS15PVCKIT8	T	1.375	PVC
BDL90CS05BLKIT8	L	0.500	Brush
BDL90CS10BLKIT8	L	1.000	Brush
BDL90CS14BLKIT8	L	1.375	Brush
DDL90CS09BLKIT8	L	1.000	Brush
DDL90CS12BLKIT8	L	1.200	Brush
DDL90CS16BLKIT8	L	1.600	Brush
DDL90CS20BLKIT8	L	2.000	Brush
DDL90CS30BLKIT8	L	3.000	Brush

Kits includes two 96 sections. (± .031 standard tolerance)

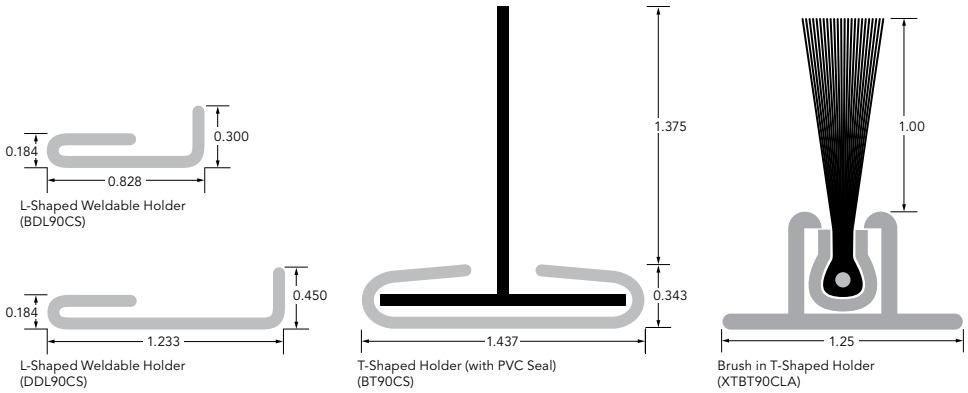

Hinge Seals

For the rear hinge of dock levelers. Choose from a 1" diameter neoprene "rope" seal or 2" x 3" foam stock. Call for details.

Product Code	Description	Dimensions
HINGE-SEAL	Foam Seal	2" x 3" x 7'
HINGE-SEAL-ROD	Hinge Seal Stabilizer	3/8" x 7'
RS1ONEOPR	1" diameter Rope Seal	Cut-To-Order

C-140

All dimensions in inches, unless otherwise indicated.
Dimensions are to Sealeze manufacturing tolerances. Contact us for more information on tolerances.

Flexible Strip Brush

Designed to meet the needs of diverse applications, EzFlex® flexible strip brush is flexible enough to fit around tight curves, lighter than typical strip brushes, and easy to use.

EzFlex flexible brush is a cost-effective, light-weight alternative to traditional strip bush for these applications and more…

- eliminate air flow
- light/sound containment
- weatherseal
- pest management

Sealeze EzFlex flexible brush is designed using recyclable nylon filament. The filaments are heat fused to the nylon holder which also clamps around the brush providing a strong bond. Our flex brush, manufactured to fit our standard holders, is an excellent choice for closing gaps, containing air or light and for use on surfaces that are uneven or curved.

EzFlex flexible brush is available in channel or section sizes C, and D, in nearly any length to suit your needs. It's easy to work with and doesn't require special tools. It can be used with our stock aluminum holders. It's stocked in 100 ft. rolls, minimum order is 100 ft.

Installation Instructions for Sealeze Metal-Backed Brush and Aluminum Holders

Therm-L-Brush installs in 5 easy steps to help reduce labor costs and callbacks:

1. Measure the door (bottom, jambs and header).
2. Cut the brush and holder to length.
3. Pry open the ends of the holder with a screwdriver.
4. Insert the brush into the holder and peen both ends of the holder with a hammer to lock the brush in place.
5. Mount the seal by holding the aluminum flange to the jambs or door bottom while aligning brush to the proper fit. Then secure with self-drilling screws provided. Slotted holes allow for easy final adjustment for the perfect fit.

Tips:

- Cut Brush with diagonal cutting pliers, shears or bolt cutters. Cutting action must pinch ends closed to seal in filaments.
- Cut Holder with hack saw, power saw (with metal cutting blade), or angle iron shear.
- Mount Jamb Seals for either entrance or overhead doors by installing header first, then measure for jamb seal.
- Mount so brush is flexed slightly against the door to ensure complete seal and to compensate for wind deflection.
- Mount Sweep so brush just touches floor or top of threshold.
- Mount Astragal Seals so brushes just touch in the center of gap between doors.
- Piece the Brush when door dimensions exceed stocked weatherseal lengths. "Splice" 2 or more pieces together by staggering the brush and holder joints.

Key Terms & Conditions of Sale

Payment: Net Cash 30 days, subject to credit approval
Returns: An RGA number must be issued by Sealeze PRIOR to returning items. Returned goods are subject to a 25% restocking fee. *Only stock items may be returned.*
Delivery: FOB Sealeze's plant in Richmond, VA.
Minimum Order: $50.00 net — Stock Items
Prices: Subject to change without notice. Additional discounts are available for quantity purchases. Please ask your Sales Representatives for details.
Complete terms and conditions available upon request and are provided at time of order.

SEALEZE®
Problem solved.

8000 Whitepine Road
North Chesterfield, VA 23237

800.446.7325
804.743.1218
fax: 800.448.2908
804.743.3413
weatherseal@sealeze.com

ISO 9001 Certified
A Jason Company
www.sealeze.com

03.2015

Contact your Sealeze Sales Representative

Material Safety Data Sheet

1 - Chemical Product and Company Identification

Manufacturer: WD-40 Company **Address: 1061 Cudahy Place (92110)** **P.O. Box 80607** **San Diego, California, USA** **92138 –0607** **Telephone:** **Emergency only: 1-888-324-7596 (PROSAR)** **Information: 1-888-324-7596** **Chemical Spills: 1-800-424-9300 (Chemtrec)** **1-703-527-3887 (International Calls)**	**Chemical Name: Organic Mixture** **Trade Name: WD-40 Aerosol** **Product Use: Lubricant, Penetrant, Drives Out Moisture, Removes and Protects Surfaces From Corrosion** **MSDS Date Of Preparation: 3/11/10**

2 – Hazards Identification

Emergency Overview:
DANGER! Flammable aerosol. Contents under pressure. Harmful or fatal if swallowed. If swallowed, may be aspirated and cause lung damage. May cause eye irritation. Avoid eye contact. Use with adequate ventilation. Keep away from heat, sparks and all other sources of ignition.

Symptoms of Overexposure:
Inhalation: High concentrations may cause nasal and respiratory irritation and central nervous system effects such as headache, dizziness and nausea. Intentional abuse may be harmful or fatal.
Skin Contact: Prolonged and/or repeated contact may produce mild irritation and defatting with possible dermatitis.
Eye Contact: Contact may be irritating to eyes. May cause redness and tearing.
Ingestion: This product has low oral toxicity. Swallowing may cause gastrointestinal irritation, nausea, vomiting and diarrhea. This product is an aspiration hazard. If swallowed, can enter the lungs and may cause chemical pneumonitis, severe lung damage and death.
Chronic Effects: None expected.
Medical Conditions Aggravated by Exposure: Preexisting eye, skin and respiratory conditions may be aggravated by exposure.

Suspected Cancer Agent:
Yes No X

3 - Composition/Information on Ingredients

Ingredient	CAS #	Weight Percent
Aliphatic Hydrocarbon	64742-47-8	45-50
Petroleum Base Oil	64742-58-1 64742-53-6 64742-56-9 64742-65-0	<25
LVP Aliphatic Hydrocarbon	64742-47-8	12-18
Carbon Dioxide	124-38-9	2-3
Surfactant	Proprietary	<2
Non-Hazardous Ingredients	Mixture	<10

4 – First Aid Measures

Ingestion (Swallowed): Aspiration Hazard. DO NOT induce vomiting. Call physician, poison control center or the WD-40 Safety Hotline at 1-888-324-7596 immediately.
Eye Contact: Flush thoroughly with water. Remove contact lenses if present after the first 5 minutes and continue flushing for several more minutes. Get medical attention if irritation persists.

Skin Contact: Wash with soap and water. If irritation develops and persists, get medical attention.
Inhalation (Breathing): If irritation is experienced, move to fresh air. Get medical attention if irritation or other symptoms develop and persist.

5 – Fire Fighting Measures

Extinguishing Media: Use water fog, dry chemical, carbon dioxide or foam. Do not use water jet or flooding amounts of water. Burning product will float on the surface and spread fire.
Special Fire Fighting Procedures: Firefighters should always wear positive pressure self-contained breathing apparatus and full protective clothing. Cool fire-exposed containers with water. Use shielding to protect against bursting containers.
Unusual Fire and Explosion Hazards: Contents under pressure. Keep away from ignition sources and open flames. Exposure of containers to extreme heat and flames can cause them to rupture often with violent force. Vapors are heavier than air and may travel along surfaces to remote ignition sources and flash back.

6 – Accidental Release Measures

Wear appropriate protective clothing (see Section 8). Eliminate all sources of ignition and ventilate area. Leaking cans should be placed in a plastic bag or open pail until the pressure has dissipated. Contain and collect liquid with an inert absorbent and place in a container for disposal. Clean spill area thoroughly. Report spills to authorities as required.

7 – Handling and Storage

Handling: Avoid contact with eyes. Avoid prolonged contact with skin. Avoid breathing vapors or aerosols. Use only with adequate ventilation. Keep away from heat, sparks, pilot lights, hot surfaces and open flames. Unplug electrical tools, motors and appliances before spraying or bringing the can near any source of electricity. Electricity can burn a hole in the can and cause contents to burst into flames. To avoid serious burn injury, do not let the can touch battery terminals, electrical connections on motors or appliances or any other source of electricity. Wash thoroughly with soap and water after handling. Keep containers closed when not in use. Keep out of the reach of children. Do not puncture, crush or incinerate containers, even when empty.
Storage: Store in a cool, well-ventilated area, away from incompatible materials Do not store above 120°F or in direct sunlight. U.F.C (NFPA 30B) Level 3 Aerosol.

8 – Exposure Controls/Personal Protection

Chemical	Occupational Exposure Limits
Aliphatic Hydrocarbon	1200 mg/m3 TWA (manufacturer recommended)
Petroleum Base Oil	5 mg/m3 TWA, 10 mg/m3 STEL ACGIH TLV 5 mg/m3 TWA OSHA PEL
LVP Aliphatic Hydrocarbon	1200 mg/m3 TWA (manufacturer recommended)
Carbon Dioxide	5000 ppm TWA (OSHA/ACGIH), 30,000 ppm STEL (ACGIH)
Surfactant	None Established
Non-Hazardous Ingredients	None Established

The Following Controls are Recommended for Normal Consumer Use of this Product
Engineering Controls: Use in a well-ventilated area.
Personal Protection:
Eye Protection: Avoid eye contact. Always spray away from your face.
Skin Protection: Avoid prolonged skin contact. Chemical resistant gloves recommended for operations where skin contact is likely.
Respiratory Protection: None needed for normal use with adequate ventilation.

For Bulk Processing or Workplace Use the Following Controls are Recommended
Engineering Controls: Use adequate general and local exhaust ventilation to maintain exposure levels below that occupational exposure limits.

Personal Protection:
Eye Protection: Safety goggles recommended where eye contact is possible.
Skin Protection: Wear chemical resistant gloves.
Respiratory Protection: None required if ventilation is adequate. If the occupational exposure limits are exceeded, wear a NIOSH approved respirator. Respirator selection and use should be based on contaminant type, form and concentration. Follow OSHA 1910.134, ANSI Z88.2 and good Industrial Hygiene practice.
Work/Hygiene Practices: Wash with soap and water after handling.

9 – Physical and Chemical Properties

Boiling Point:	361 - 369°F (183 - 187°C)	Specific Gravity:	0.8 – 0.82 @ 60°F
Solubility in Water:	Insoluble	pH:	Not Applicable
Vapor Pressure:	95-115 PSI @ 70°F	Vapor Density:	Greater than 1
Percent Volatile:	70-75%	VOC:	412 grams/liter (49.5%)
Coefficient of Water/Oil Distribution:	Not Determined	Appearance/Odor	Light amber liquid/mild odor
Flash Point:	122°F (49°C) Tag Open Cup (concentrate)	Flammable Limits: (Solvent Portion)	LEL: 0.6% UEL: 8.0%
Pour Point:	-63°C (-81.4°F) ASTM D-97	Kinematic Viscosity:	2.79-2.96cSt @ 100°F

10 – Stability and Reactivity

Stability: Stable
Hazardous Polymerization: Will not occur.
Conditions to Avoid: Avoid heat, sparks, flames and other sources of ignition. Do not puncture or incinerate containers.
Incompatibilities: Strong oxidizing agents.
Hazardous Decomposition Products: Carbon monoxide and carbon dioxide.

11 – Toxicological Information

The oral toxicity of this product is estimated to be greater than 5,000 mg/kg based on an assessment of the ingredients. This product is not classified as toxic by established criteria. It is an aspiration hazard.
None of the components of this product is listed as a carcinogen or suspected carcinogen or is considered a reproductive hazard.

12 – Ecological Information

No data is currently available.

13 - Disposal Considerations

If this product becomes a waste, it would be expected to meet the criteria of a RCRA ignitable hazardous waste (D001). However, it is the responsibility of the generator to determine at the time of disposal the proper classification and method of disposal. Dispose in accordance with federal, state, and local regulations.

14 – Transportation Information_

DOT Surface Shipping Description: Consumer Commodity, ORM-D
IMDG Shipping Description: Un1950, Aerosols, 2.1, LTD QTY

15 – Regulatory Information

U.S. Federal Regulations:

CERCLA 103 Reportable Quantity: This product is not subject to CERCLA reporting requirements, however, oil spills are reportable to the National Response Center under the Clean Water Act and many states have more stringent release reporting requirements. Report spills required under federal, state and local regulations.
SARA TITLE III:
Hazard Category For Section 311/312: Acute Health, Fire Hazard, Sudden Release of Pressure
Section 313 Toxic Chemicals: This product contains the following chemicals subject to SARA Title III Section 313 Reporting requirements: None
Section 302 Extremely Hazardous Substances (TPQ): None
EPA Toxic Substances Control Act (TSCA) Status: All of the components of this product are listed on the TSCA inventory.
California Safe Drinking Water and Toxic Enforcement Act (Proposition 65): This product does not contain chemicals regulated under California Proposition 65.
VOC Regulations: This product complies with the consumer product VOC limits of CARB, the US EPA and states adopting the OTC VOC rules.
Canadian Environmental Protection Act: One of the components is listed on the NDSL. All of the other ingredients are listed on the Canadian Domestic Substances List or exempt from notification.
Canadian WHMIS Classification: Class B-5 (Flammable Aerosol)
This MSDS has been prepared according to the criteria of the Controlled Products Regulation (CPR) and the MSDS contains all of the information required by the CPR.

16 – Other Information:

HMIS Hazard Rating:
Health – 1 (slight hazard), Fire Hazard – 4 (severe hazard), Reactivity – 0 (minimal hazard)

SIGNATURE:_____ TITLE: Director of Global Quality Assurance

REVISION DATE: March 2010 SUPERSEDES: August 2009

WD-40® Technical Data Sheet

Physical Characteristics

Appearance: Aerosol—Aerosolized Liquid Bulk—Liquid	**Boiling Point :** 183°- 187 ° C (361° F - 369 ° F)
Color: Light (or pale) amber	**Vapor Density:** >1
Odor: Characteristic	**Flash Point:** 49° C (122° F)(Tag Open Cup)
Freeze Point/Pour Point: -63° C (-81.4° F)(ASTM D-97)	**Volatile by volume:** 70% - 75%
Kinematic Viscosity @ 100° F: 2.79 - 2.96cSt	**Lower flammability limit:** 0.6%
Specific Gravity @ 60° F: 0.8-0.82	**Upper flammability limit:** 8.0%
	Vapor Pressure: Aerosol: 95-115 psi @ 21° C (70°F) Bulk: 1 psi @ 38°C (100°F)(ASTM D323)

Packages

Smart Straw® 8 oz NSN 8030-01-418-9006 11 oz NSN 8030-01-418-9008 12 oz	
Big Blast® 18 oz NSN 8030-01-439-0681	
Handy Can 3 oz NSN 8030-01-418-9007	
Trigger Pro® Non-Aerosol 20 oz	
Spray Applicator Bottle 16 oz (Empty)	
Bulk Liquid 1 Gallon 5 Gallon 55 Gallon NSN 8030-00-838-7788	

Product Features

WD-40 lubricates moving parts such as hinges, wheels, rollers, chains, and gears. It protects against rust and corrosion on items like tools, and sporting equipment. It penetrates to free stuck corroded parts like nuts, bolts, valves and locks. It quickly removes adhesives, corrosion and paint. It displaces moisture to restore water flooded equipment such as engines, spark plugs and power tools.

WD-40 and the Environment

- WD-40 Multi-Use Product does not contain chloroflurocarbons (CFCs), (HCFCs)
- WD-40 Multi-Use Product does not contain Lead (Pb), Mercury (Hg), Cadmium (Cd), Hexavalent Chromium (Cr6), Polybrominated biphenyls (PBB), or Polybrominated di-phenylether complying with the re-stricted substances listed in Article 4(1) of the RoHS Directive.
- WD-40 Multi-Use Product contains no ingredients requiring California Prop 65 listing or labeling such as benzene or toluene.
- WD-40 Multi-Use Product complies with VOC regulations for all 50 states.
- WD-40 Multi-Use Product is inher-ently biodegradable according to OECD Method 301
- Aerosol products are recyclable, just like any other empty steel con-tainer! Thousands of communities now include aerosol product recy-cling in both household residential and curbside buy-back and drop-off programs. The U.S. EPA recommends that all aerosol containers be recy-cled once they are empty.

Properties

Operating Temperature: -10° F to 200° F **Dielectric Strength:** 44,400 - 47,800 Volts **Solubility in Water:** Insoluble	**Kb Value:** 24.8 **Film Thickness:** 17 um (US) **Coverage:** 600-1000 ft^2 per gal
Surface Compatibility For all variations : WD-40 demonstrates none to negligible deleterious effect to plastic, rubber, and metal hard surfaces. This includes Acetal, neoprene/hard rubber, HDPE, PPS Copolymer Polysulfone, Teflon, Viton, steel, galvanized steel hot dip, electroplated, copper, brass, magnesium, nickel, tin plate, titanium, and zinc.	**Surface Cautions** Nearly all surfaces interact with WD-40 as they would any high grade ali-phatic petroleum spirit. Certain types of rubber will swell upon prolonged immersion. Wax polishes and certain wax coatings may be softened by WD-40. Clear polycarbonate and polystyrene may stress craze or crack. Always test surfaces first.

Performance - WD-40® Multi-Use Product

Test Method	Property	Results
ASTM 4172	Lubricates and Protects	0.60-0.70 mm at RT
ASTM 3233	Extreme Pressure Lubrication	1300-2000 lbs
ASTM B-117	Corrosion Protection (Salt Spray)	0-20% in 72 hours

Safety

WD-40 Aerosol: DANGER! Flammable aerosol. Contents under pressure. Harmful or fatal if swallowed. If swallowed, may be aspirated and cause lung damage. May cause eye irritation. Avoid eye contact. Use with adequate ventilation. Keep away from heat, sparks and all other sources of ignition.

WD-40 Bulk Liquid: DANGER! Combustible liquid. Harmful or fatal if swallowed. If swallowed, may be aspirated and cause lung damage. May cause eye irritation. Avoid eye contact. Use with adequate ventilation. Keep away from heat, sparks and all other sources of ignition.

Symptoms of Overexposure:

Inhalation: High concentrations may cause nasal and respiratory irritation and central nervous system effects such as headache, dizziness and nausea. Intentional abuse may be harmful or fatal.
Skin Contact: Prolonged and/or repeated contact may produce mild irritation and defatting with possible dermatitis.
Eye Contact: Contact may be irritating to eyes. May cause redness and tearing.
Ingestion: This product has low oral toxicity. Swallowing may cause gastrointestinal irritation, nausea, vomiting and diarrhea. This product is an aspiration hazard. If swallowed, can enter the lungs and may cause chemical pneumonitis, severe lung damage and death.
Chronic Effects: None expected.
Medical Conditions Aggravated by Exposure: Preexisting eye, skin and respiratory conditions may be aggravated by exposure.

Suspected Cancer Agent:
Yes No X

Regulatory

U.S. Federal Regulations:

CERCLA 103 Reportable Quantity: This product is not subject to CERCLA reporting requirements, however, oil spills are reportable to the National Response Center under the Clean Water Act and many states have more stringent release reporting requirements. Report spills required under federal, state and local regulations.

SARA TITLE III:

Hazard Category For Section 311/312: Acute Health, Fire Hazard, Sudden Release of Pressure
Section 313 Toxic Chemicals: This product contains the following chemicals subject to SARA Title III Section 313 Reporting requirements: None
Section 302 Extremely Hazardous Substances (TPQ): None

EPA Toxic Substances Control Act (TSCA) Status: All of the components of this product are listed on the TSCA inventory.

California Safe Drinking Water and Toxic Enforcement Act (Proposition 65): This product does not contain chemicals regulated under California Proposition 65.

VOC Regulations: This product complies with the consumer product VOC limits of CARB, LADCO, the US EPA and states adopting the OTC VOC rules.

WD-40 COMPANY, 1061 Cudahy Place,
San Diego, California 92110 U.S.A
WD-40 Safety Hotline 1-888-324-7596
www.WD40.com
C-148

Unit Report For RTU-48LC-6 tons

Project: 17_Smartwatt_Cazenovia-NY 02/13/2017
Prepared By: Brian W. Meneghan 04:35PM

Unit Parameters

Unit Model: **48LCEA07E2M5-0N4B0**
Unit Size: **07 (6 Tons)**
Volts-Phase-Hertz: **208-3-60**
Heating Type: **Gas**
Duct Cfg: **Vertical Supply / Vertical Return**
Medium Gas Heat
Three stage cooling capacity control with TXV and Humidi-MiZer

Dimensions (ft. in.) & Weight (lb.) *

Unit Length: **7' 4.125"**
Unit Width: **4' 11.5"**
Unit Height: **4' 1.375"**
*** Total Operating Weight: **1282** lb

*** Weights and Dimensions are approximate. Weight does not include unit packaging. Approximate dimensions are provided primarily for shipping purposes. For exact dimensions and weights, refer to appropriate product data catalog.

Unit Configuration

CO2 Sensor
Medium Static Belt Drive with VFD Controller
Al/Cu - Al/Cu - Louvered Hail Guards
Electro Mechanical Controls
Ultra LOW LEAK Temperature EconoMi$er with barometric relief
Hinged Access Panels and Unpowered Convenience Outlet
HACR Breaker
Standard Packaging
Humidi-MiZer™ Adaptive Dehumidification System

Warranty Information

1-Year parts
5-Year compressor parts
10-Year heat exchanger - Aluminized

No optional warranties were selected.

NOTE: Please see Warranty Catalog 500-089 for explanation of policies and ordering methods.

Ordering Information

Part Number	Description	Quantity
48LCEA07E2M5-0N4B0	Rooftop Unit	1
	Base Unit	
	CO2 Sensor	
	Medium Static Belt Drive with VFD Controller	
	Al/Cu - Al/Cu - Louvered Hail Guards	
	Hinged Access Panels and Unpowered Convenience Outlet	
	HACR Breaker	
	Ultra Low Leak Temp Econo X with baro relief, W7220 control. Meets Calf. Title 24 FDD & Leak Rates	
Accessories		
CRDISKIT002A00	2 Speed VFD display kit	1
CRFLUEDS001A00	Flue Discharge Deflector	1
CRPHASE3001A02	Phase Monitor Control	1
CRSTATUS002B01	Plugged Filter Indicator	1
CRSTAT3C001A00	Commercial Programmable thermostat	1

NOTES:

1. DIMENSIONS ARE IN INCHES, DIMENSIONS IN [ ] ARE IN MILLIMETERS.
2. CENTER OF GRAVITY
3. DIRECTION OF AIR FLOW

UNIT	OUTDOOR COIL TYPE	J	K	H
48LC 07	RTPF	49 3/8 [1253]	36 3/8 [925]	15 7/8 [403]

UNITED TECHNOLOGIES CARRIER P.O. BOX 4808 SYRACUSE, NY 13221

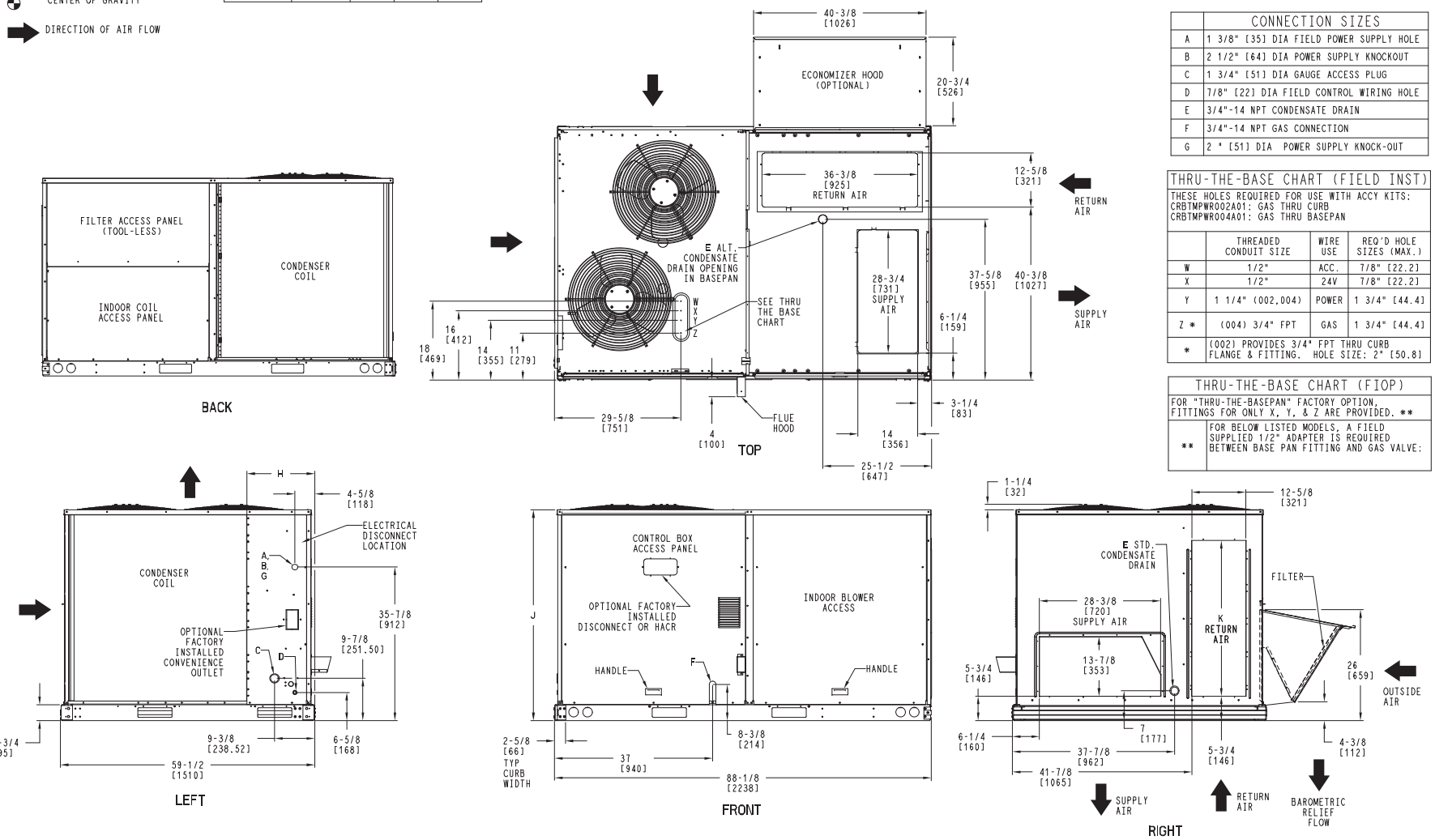

CONNECTION SIZES	
A	1 3/8" [35] DIA FIELD POWER SUPPLY HOLE
B	2 1/2" [64] DIA POWER SUPPLY KNOCKOUT
C	1 3/4" [51] DIA GAUGE ACCESS PLUG
D	7/8" [22] DIA FIELD CONTROL WIRING HOLE
E	3/4"-14 NPT CONDENSATE DRAIN
F	3/4"-14 NPT GAS CONNECTION
G	2 " [51] DIA POWER SUPPLY KNOCK-OUT

THRU-THE-BASE CHART (FIELD INST)

THESE HOLES REQUIRED FOR USE WITH ACCY KITS:
CRBTMPWR002A01: GAS THRU CURB
CRBTMPWR004A01: GAS THRU BASEPAN

	THREADED CONDUIT SIZE	WIRE USE	REQ'D HOLE SIZES (MAX.)
W	1/2"	ACC.	7/8" [22.2]
X	1/2"	24V	7/8" [22.2]
Y	1 1/4" (002,004)	POWER	1 3/4" [44.4]
Z *	(004) 3/4" FPT	GAS	1 3/4" [44.4]
*	(002) PROVIDES 3/4" FPT THRU CURB FLANGE & FITTING. HOLE SIZE: 2" [50.8]		

THRU-THE-BASE CHART (FIOP)

FOR "THRU-THE-BASEPAN" FACTORY OPTION, FITTINGS FOR ONLY X, Y, & Z ARE PROVIDED. **

**	FOR BELOW LISTED MODELS, A FIELD SUPPLIED 1/2" ADAPTER IS REQUIRED BETWEEN BASE PAN FITTING AND GAS VALVE:

SHEET	DATE	SUPERCEDES			REV
1 OF 2	7/11/14	5/8/13	48LC 07 SINGLE ZONE ELECTRICAL COOLING WITH GAS HEAT	48LC500391	B

C-150

UNIT	OUTDOOR COIL TYPE	STD. UNIT WEIGHT ***		CORNER WEIGHT (A)		CORNER WEIGHT (B)		CORNER WEIGHT (C)		CORNER WEIGHT (D)		C.G.		
		LBS.	KG.	LBS.	KG.	LBS.	KG.	LBS.	KG.	LBS.	KG.	X	Y	Z
48LC 07	RTPF	1032	468	226	102	204	92	286	130	317	144	41 3/4 [1060]	24 3/4 [629]	20 3/4 [527]

UNITED TECHNOLOGIES CARRIER P.O. BOX 4808 SYRACUSE, NY 13221

*** STANDARD UNIT WEIGHT IS WITH LOW GAS HEAT AND WITHOUT PACKAGING.
FOR OTHER OPTIONS AND ACCESSORIES, REFER TO THE PRODUCT DATA CATALOG.

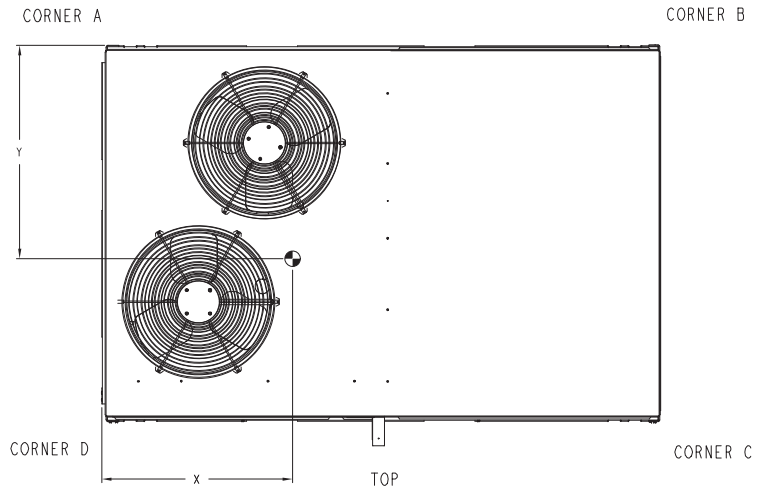

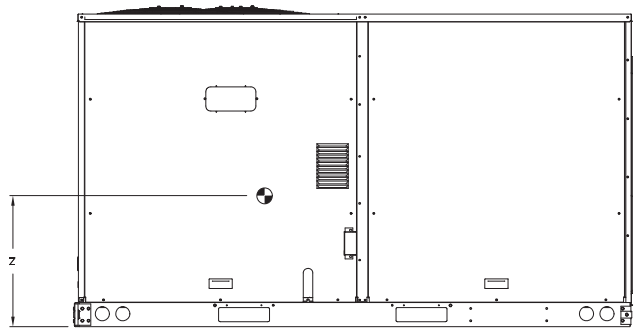

SHEET	DATE	SUPERCEDES			REV
2 OF 2	7/11/14	5/8/13	48LC 07 SINGLE ZONE ELECTRICAL COOLING WITH GAS HEAT	48LC500391	B

C-151

C-152

Service Clearance

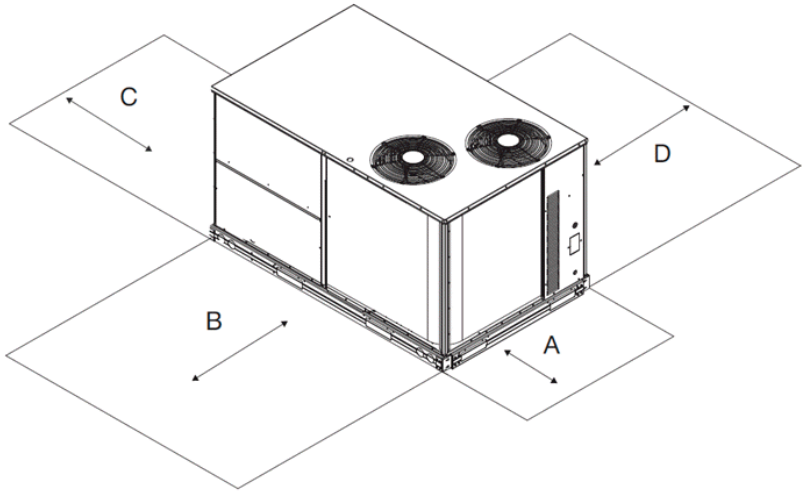

C11247

LOCATION	DIMENSION	CONDITION
A	48-in (1219 mm)	• Unit disconnect is mounted on panel
	36-in (914 mm)	• If dimension-B is 12-in (305 mm)
	18-in (457 mm)	• No disconnect, convenience outlet option • Recommended service clearance (use electric screwdriver)
	12-in (305 mm)	• Minimum clearance (use manual ratchet screwdriver)
B	36-in (914 mm)	• Unit has economizer
	12-in (305 mm)	• If dimension-A is 36-in (914 mm)
	Special	• Check for sources of flue products within 10-ft of unit fresh air intake hood
C	36-in (914 mm)	• Side condensate drain is used
	18-in (457 mm)	• Minimum clearance
D	48-in (1219 mm)	• No flue discharge accessory installed, surface is combustible material
	42-in (1067 mm)	• Surface behind servicer is grounded (e.g., metal, masonry wall, another unit)
	36-in (914 mm)	• Surface behind servicer is electrically non-conductive (e.g., wood, fiberglass)
	Special	• Check for adjacent units or building fresh air intakes within 10-ft of this unit's flue outlet

NOTE: Unit not designed to have overhead obstruction. Contact Application Engineering for guidance on any application planning overhead obstruction or vertical clearances.

Chassis 3-4a

Part Number:48LCEA07E2M5-0N4B0

ARI EER:	**13.00**	
IEER (Max Cooling at Normal Cooling Design Mode):	**20.5**	
Base Unit Dimensions		
Unit Length:	**88.1**	in
Unit Width:	**59.5**	in
Unit Height:	**49.4**	in
Operating Weight		
Base Unit Weight:	**1032**	lb
Medium Gas Heat:	**15**	lb
Three stage cooling capacity control with TXV and Humidi-MiZer:	**80**	lb
CO2 Sensor:	**5**	lb
Medium Static Belt Drive with VFD Controller:	**15**	lb
Al/Cu - Al/Cu - Louvered Hail Guards:	**34**	lb
Ultra LOW LEAK Temperature EconoMi$er with barometric relief:	**74**	lb
Hinged Access Panels and Unpowered Convenience Outlet:	**10**	lb
HACR Breaker:	**10**	lb
Accessories		
Flue Discharge Deflector:	**7**	lb
Total Operating Weight:	**1282**	lb
Unit		
Unit Voltage-Phase-Hertz:	**208-3-60**	
Air Discharge:	**Vertical**	
Fan Drive Type:	**Belt**	
Actual Airflow:	**2400**	CFM
Site Altitude:	**554**	ft
Cooling Performance		
Condenser Entering Air DB:	**89.0**	F
Evaporator Entering Air DB:	**80.6**	F
Evaporator Entering Air WB:	**67.4**	F
Entering Air Enthalpy:	**32.04**	BTU/lb
Evaporator Leaving Air DB:	**57.5**	F
Evaporator Leaving Air WB:	**57.3**	F
Evaporator Leaving Air Enthalpy:	**24.80**	BTU/lb
Gross Cooling Capacity:	**76.68**	MBH
Gross Sensible Capacity:	**58.53**	MBH
Compressor Power Input:	**4.16**	kW
Coil Bypass Factor:	**0.052**	
Mixed Air		
Outdoor Air Airflow:	**840**	CFM
Outdoor Air DB:	**89.0**	F
Outdoor Air WB:	**73.0**	F
Outdoor Air Htg. Temp.:	**1.0**	F
Return Air DB:	**76.0**	F
Return Air WB:	**64.0**	F
Return Air Htg. Temp.:	**70.0**	F
Heating Performance		
Heating Airflow:	**2400**	CFM
Entering Air Temp:	**45.9**	F
Leaving Air Temp:	**86.4**	F
Gas Heating Input Capacity:	**90.0 / 125.0**	MBH
Gas Heating Output Capacity:	**73.0 / 103.0**	MBH
Temperature Rise:	**40.5**	F

Thermal Efficiency (%): **82.0**

Supply Fan

External Static Pressure:	**0.50**	in wg
Options / Accessories Static Pressure		
Humidi-MiZer Dehumidification System:	**0.11**	in wg
Economizer:	**0.09**	in wg
Total Application Static (ESP + Unit Opts/Acc.):	**0.69**	in wg
Fan RPM:	**704**	
Fan Power:	**0.88**	BHP
NOTE:	**Selected IFM RPM Range: 605 - 908**	

Electrical Data

Voltage Range:	**187 - 253**
Compressor #1 RLA:	**8.3**
Compressor #1 LRA:	**58**
Compressor #2 RLA:	**13.2**
Compressor #2 LRA:	**88**
Indoor Fan Motor Type:	**MED**
Indoor Fan Motor FLA:	**5.8**
Combustion Fan Motor FLA (ea):	**0.48**
Power Supply MCA:	**35**
Disconnect Size FLA:	**36**
Disconnect Size LRA:	**173**
Electrical Convenience Outlet:	**None**
Outdoor Fan [Qty / FLA (ea)]:	**2 / 1.8**
Power Supply HACR:	**45**

Control Panel SCCR: 5kA RMS at Rated Symmetrical Voltage

Acoustics

Sound Power Levels, db re 10E-12 Watts

	Discharge	Inlet	Outdoor
63 Hz	96.5	94.0	88.6
125 Hz	88.9	83.0	85.0
250 Hz	72.8	67.6	81.6
500 Hz	65.9	62.8	79.5
1000 Hz	61.2	60.2	77.4
2000 Hz	59.9	54.9	74.1
4000 Hz	61.8	53.7	71.0
8000 Hz	62.5	53.3	66.3
A-Weighted	76.0	71.6	82.0

Advanced Acoustics

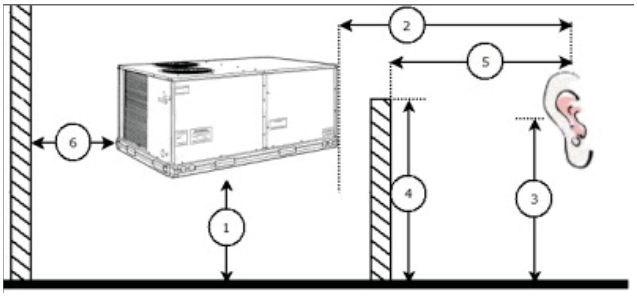

Advanced Accoustics Parameters

1. Unit height above ground: **30.0** ft
2. Horizontal distance from unit to receiver: **50.0** ft
3. Receiver height above ground: **5.7** ft
4. Height of obstruction: **0.0** ft
5. Horizontal distance from obstruction to receiver: **0.0** ft
6. Horizontal distance from unit to obstruction: **0.0** ft

Detailed Acoustics Information

Octave Band Center Freq. Hz	63	125	250	500	1k	2k	4k	8k	Overall
A	88.6	85.0	81.6	79.5	77.4	74.1	71.0	66.3	91.4 Lw
B	62.4	68.9	73.0	76.3	77.4	75.3	72.0	65.2	82.6 LwA
C	56.2	52.6	49.2	47.1	45.0	41.7	38.6	33.9	59.0 Lp
D	30.0	36.5	40.6	43.9	45.0	42.9	39.6	32.8	50.2 LpA

Legend
A Sound Power Levels at Unit's Acoustic Center, Lw
B A-Weighted Sound Power Levels at Unit's Acoustic Center, LwA
C Sound Pressure Levels at Specific Distance from Unit, Lp
D A-Weighted Sound Pressure Levels at Specific Distance from Unit, LpA

Calculation methods used in this program are patterned after the ASHRAE Guide; other ASHRAE Publications and the AHRI Acoustical Standards. While a very significant effort has been made to insure the technical accuracy of this program, it is assumed that the user is knowledgeable in the art of system sound estimation and is aware of the tolerances involved in real world acoustical estimation. This program makes certain assumptions as to the dominant sound sources and sound paths which may not always be appropriate to the real system being estimated. Because of this, no assurances can be offered that this software will always generate an accurate sound prediction from user supplied input data. If in doubt about the estimation of expected sound levels in a space, an Acoustical Engineer or a person with sound prediction expertise should be consulted.

Performance Summary For RTU-48LC-6 tons

Project: 17_Smartwatt_Cazenovia-NY 02/13/2017
Prepared By: Brian W. Meneghan 04:35PM

Fan Curve

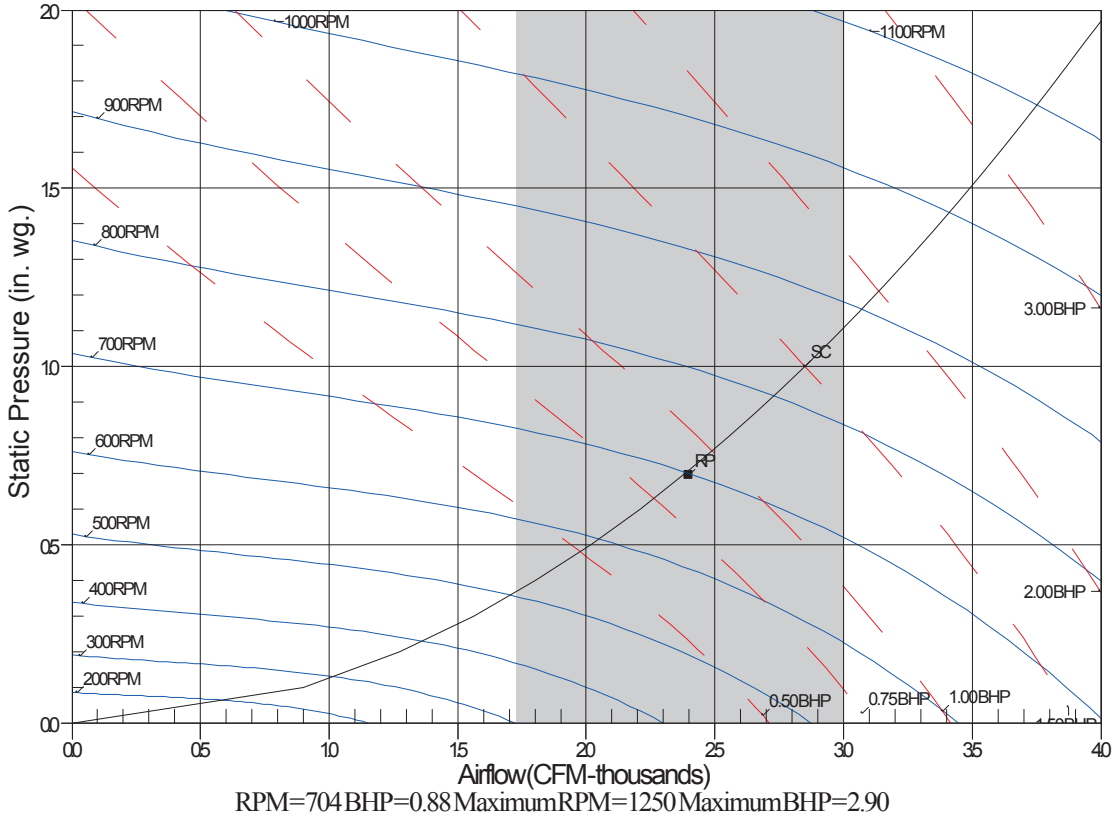

RPM=704 BHP=0.88 Maximum RPM=1250 Maximum BHP=2.90
Note: Please contact application engineering for selections outside the shaded region.
SC-System Curve RP-Rated Point

WeatherExpert® - 48LC

PACKAGED ROOFTOP GAS HEATING/ELECTRIC COOLING UNITS
6, 7.5, 8.5 and 10 TONS

Optional Economizer Shown

WeatherExpert® - 48LC

48LC units are ultra high-efficiency, single-packaged electric cooling, gas heating units. Units utilize three stages of cooling capacity control with matching indoor fan motor speed control. All models are available with belt drive indoor fan motors with Variable Frequency Drive (VFD) speed controller and Direct Dive - ECM outdoor fan motor.
Models offer standard electro mechanical controls that use Carrier's Comfort Control Logic and LED indicators.

All units are factory tested in both heating and cooling modes, and rated in accordance with AHRI Standards 340/360.

STANDARD FEATURES INCLUDE:
- Puron® (R-410A) HFC refrigerant factory charged
- IEER's up to 20.8 and EER's up to 13.5
- ASHRAE 90.1 compliant, Energy Star qualified
- Meets or exceeds CEE tier II performance criteria
- Three stage cooling capacity control with crankcase heaters
- Single refrigerant circuit with full face activated evaporator coil.
- Belt drive indoor fan and pulley system with Variable Frequency Drive(VFD) motor controller on all models
- High efficient ECM outdoor fan motor
- Sound levels as low as 82 dB.
- Precision sized TXV refrigerant metering devices
- Exclusive non-corrosive composite condensate pan in accordance with ASHRAE Standard 62, sloping design, side or center drain
- Standard ambient cooling operation down to 40°F (4°C) with lower operation range with integrated economizer. SystemVu™ controls allows operation down to 0°F (-18°C). All units operate up to and to 125°F (52°C).
- Designed in accordance with UL, Standard 1995
- High performance 5/16" diameter, internally enhanced copper tube / aluminum fin condenser and evaporator coils
- Pre-painted exterior panels and primer-coated interior panels tested to 500 hours salt spray protection
- Exclusive IGC solid-state control for on-board diagnostics with LED error code designation burner control logic and energy saving indoor fan motor delay
- Induced draft gas heat combustion design
- Redundant gas valves with up to two stages of heating
- Low pressure and high pressure switch protected.

MAINTENANCE FEATURES:
- Access panels with easy grip handles and tool-less filter access door
- Innovative easy starting, no-strip screws on unit access panels
- Two-inch disposable return air filters

INSTALLATION FEATURES:
- Thru-the-bottom power entry capability
- Single point gas and electric connections
- Full perimeter base rail with built-in rigging adapters and fork slots
- Field convertible from vertical to horizontal airflow on all models. 08-12 models require an easy field installed supply duct kit.

STANDARD LIMITED PARTS WARRANTY:
- 10-year parts heat exchanger – 15-year stainless steel option
- 5-year compressor parts, 1-year parts, 3-year SystemVu™
- Many optional upgrades available

OPTIONS/ACCY INCLUDE BUT ARE NOT LIMITED TO:
- Supply and Return air smoke detectors, high static motors
- Louvered condenser coil guards and coil coating options
- Ultra Low Leak Economizer and convenience outlet options
- Stainless Steel heat exchanger
- HACR breaker or non-fused disconnect switch
- Hinged access panels with quick turn latches and lift tabs
- Patented Humidi-MiZer® adaptive dehumidification system
- RTU Open multi-protocol DDC controller
- SystemVu Controls:
  - Large full text – multi line display
  - USB Flash Port for data transfer
  - Built in i-Vu®, CCN and BACnet®
  - Refrigerant pressure from display
  - Quick LED Status – Run, Alert, Fault
  - Conventional Stat or Sensor capabilities
  - Historical component runtime and starts

RTU-48LC-8.5 tons

Tag Cover Sheet
Unit Report
Certified Drawing
Performance Report
Unit Feature Sheet
Spec Sheet

Unit Report For RTU-48LC-8.5 tons

Project: 17_Smartwatt_Cazenovia-NY 02/13/2017
Prepared By: Brian W. Meneghan 04:35PM

Unit Parameters

Unit Model: **48LCD009E2M5-0E4B0**
Unit Size: **09 (8.5 Tons)**
Volts-Phase-Hertz: **208-3-60**
Heating Type: **Gas**
Duct Cfg: **Vertical Supply / Vertical Return**
Low Gas Heat
Three stage cooling capacity control with TXV

Dimensions (ft. in.) & Weight (lb.) ***

Unit Length: **9' 7.875"**
Unit Width: **5' 3.375"**
Unit Height: **4' 10.75"**
*** Total Operating Weight: **1721** lb

*** Weights and Dimensions are approximate. Weight does not include unit packaging. Approximate dimensions are provided primarily for shipping purposes. For exact dimensions and weights, refer to appropriate product data catalog.

Unit Configuration

CO2 Sensor
Medium Static Belt Drive with VFD Controller
Al/Cu - Al/Cu - Louvered Hail Guards
Electro Mechanical Controls
Standard Leak Enthalpy EconoMi$er w/ barometric relief
Hinged Access Panels and Unpowered Convenience Outlet
HACR Breaker
Standard Packaging

Warranty Information

1-Year parts
5-Year compressor parts
10-Year heat exchanger - Aluminized

No optional warranties were selected.

NOTE: Please see Warranty Catalog 500-089 for explanation of policies and ordering methods.

Ordering Information

Part Number	Description	Quantity
48LCD009E2M5-0E4B0	Rooftop Unit	1
	Base Unit	
	CO2 Sensor	
	Medium Static Belt Drive with VFD Controller	
	Al/Cu - Al/Cu - Louvered Hail Guards	
	Hinged Access Panels and Unpowered Convenience Outlet	
	HACR Breaker	
	Std Leak Enty Econo X with baro relief, W7220 control. Meets Calf. Title 24 FDD	
Accessories		
CRPHASE3001A02	Phase Monitor Control	1
CRSTATUS003B01		1
CRSTATUS002B01	Plugged Filter Indicator	1
CRFLUEDS007A00	Flue Discharge Deflector	1
CRCBDIOX005A00	CO2 Sensor	1
CRSTAT3C001A00	Commercial Programmable thermostat	1

Certified Drawing for RTU-48LC-8.5 tons

Project: 17_Smartwatt_Cazenovia-NY
Prepared By: Brian W. Meneghan

02/13/2017
04:35PM

NOTES:

1. DIMENSIONS ARE IN INCHES, DIMENSIONS IN [] ARE IN MILLIMETERS.
2. CENTER OF GRAVITY
3. DIRECTION OF AIRFLOW

UNITED TECHNOLOGIES CARRIER P.O. BOX 4808 SYRACUSE, NY 13221

THIS DOCUMENT IS THE PROPERTY OF CARRIER CORPORATION AND IS DELIVERED UPON THE EXPRESS CONDITION THAT THE CONTENTS WILL NOT BE DISCLOSED OR USED WITHOUT CARRIER CORPORATIONS WRITTEN CONSENT.

SUBMISSION OF THESE DRAWINGS OR DOCUMENTS DOES NOT CONSTITUTE PART PERFORMANCE OR ACCEPTANCE OF CONTRACT.

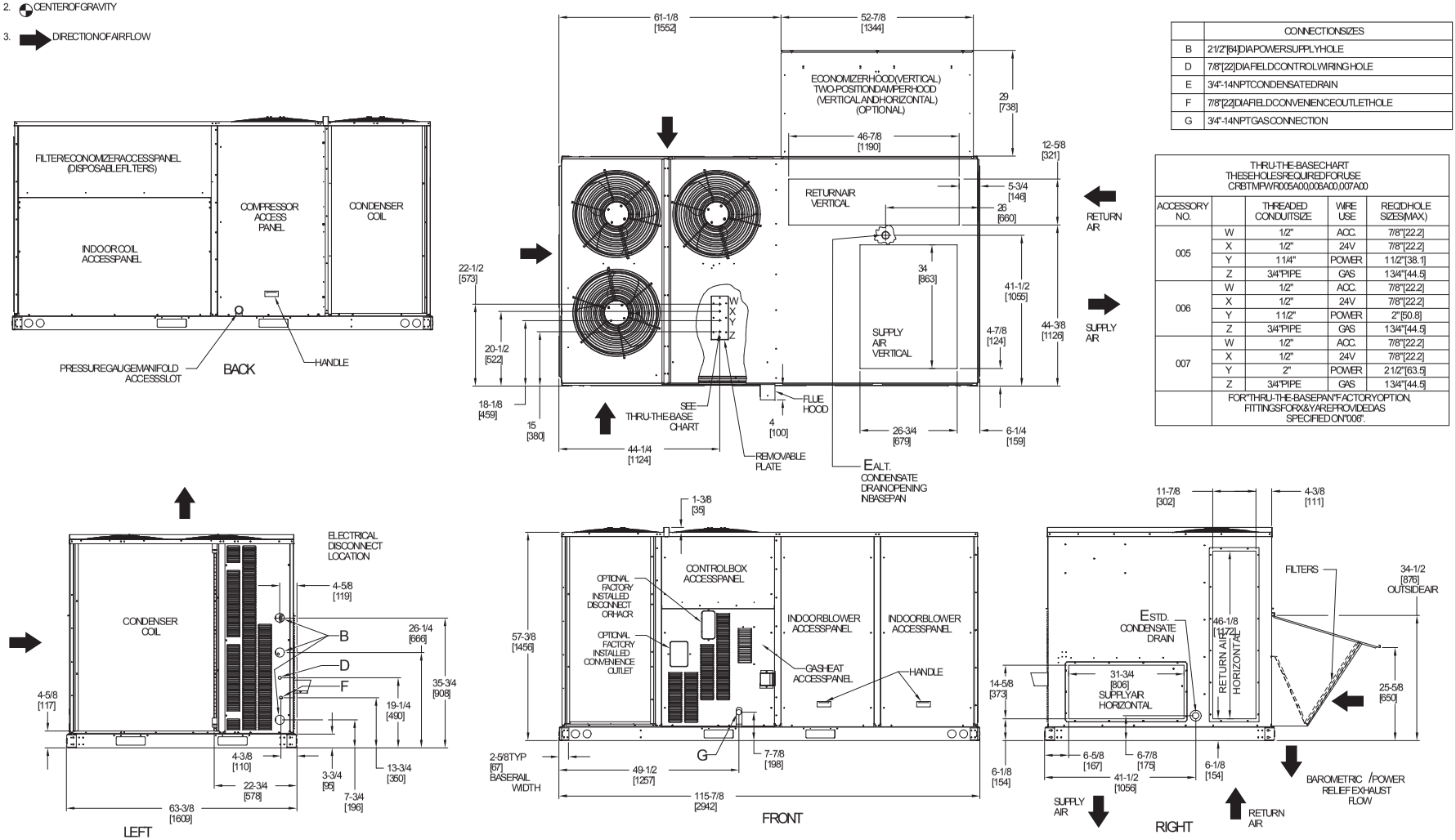

	CONNECTION SIZES
B	2 1/2" [64] DIA POWER SUPPLY HOLE
D	7/8" [22] DIA FIELD CONTROL WIRING HOLE
E	3/4"-14 NPT CONDENSATED DRAIN
F	7/8" [22] DIA FIELD CONVENIENCE OUTLET HOLE
G	3/4"-14 NPT GAS CONNECTION

THRU-THE-BASE CHART
THESE HOLES REQUIRED FOR USE
CRBTMPWR005A00,006A00,007A00

ACCESSORY NO.		THREADED CONDUIT SIZE	WIRE USE	REQD HOLE SIZES (MAX)
005	W	1/2"	ACC.	7/8" [22.2]
	X	1/2"	24V	7/8" [22.2]
	Y	1 1/4"	POWER	1 1/2" [38.1]
	Z	3/4" PIPE	GAS	1 3/4" [44.5]
006	W	1/2"	ACC.	7/8" [22.2]
	X	1/2"	24V	7/8" [22.2]
	Y	1 1/2"	POWER	2" [50.8]
	Z	3/4" PIPE	GAS	1 3/4" [44.5]
007	W	1/2"	ACC.	7/8" [22.2]
	X	1/2"	24V	7/8" [22.2]
	Y	2"	POWER	2 1/2" [63.5]
	Z	3/4" PIPE	GAS	1 3/4" [44.5]
	FOR "THRU-THE-BASE PAN" FACTORY OPTION, FITTINGS FOR X & Y ARE PROVIDED AS SPECIFIED ON '006'.			

SHEET	DATE	SUPERCEDES			REV
1 OF 2	05/08/13	-	48LC09-12 SINGLE ZONE ELECTRICAL COOLING WITH GAS HEAT	48LC500390	A

C-161

Certified Drawing for RTU-48LC-8.5 tons

Project: 17_Smartwatt_Cazenovia-NY
Prepared By: Brian W. Meneghan

02/13/2017
04:35PM

UNIT	STD.UNIT WEIGHT		CORNER WEIGHT(A)		CORNER WEIGHT(B)		CORNER WEIGHT(C)		CORNER WEIGHT(D)		C.G.		
	LBS.	KG.	LBS.	KG.	LBS.	KG.	LBS.	KG.	LBS.	KG.	X	Y	Z
48LC 09	1606	728	406	184	410	186	397	180	393	178	58[1473]	32[812]	20 5/8[524]
48LC 12	1606	728	406	184	410	186	397	180	393	178	58[1473]	32[812]	20 5/8[524]

STANDARD UNIT WEIGHT IS WITH LOW GAS HEAT & WITHOUT PACKAGING.
FOR OPTIONS & ACCESSORIES, REFER TO THE PRODUCT DATA CATALOG.

UNITED TECHNOLOGIES CARRIER
P.O.BOX 4808
SYRACUSE, NY
13221

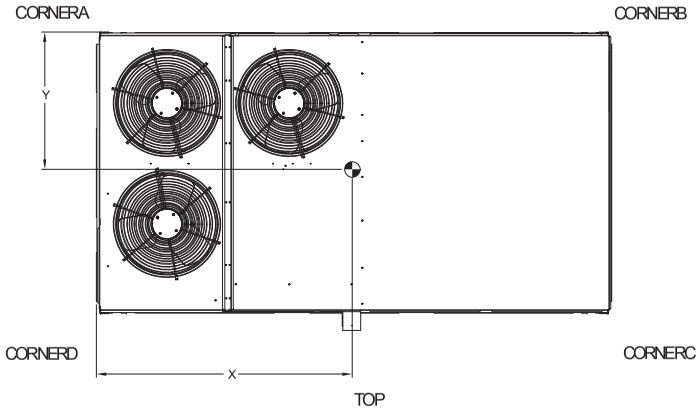

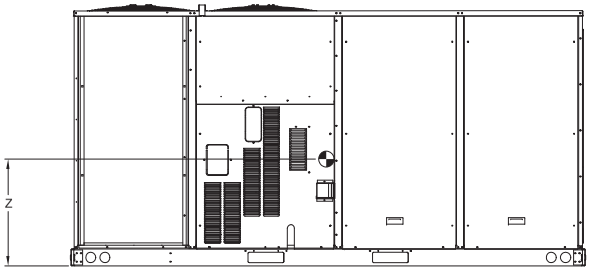

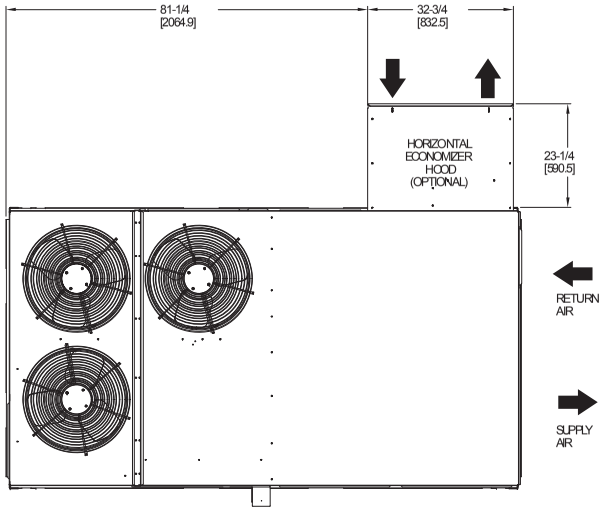

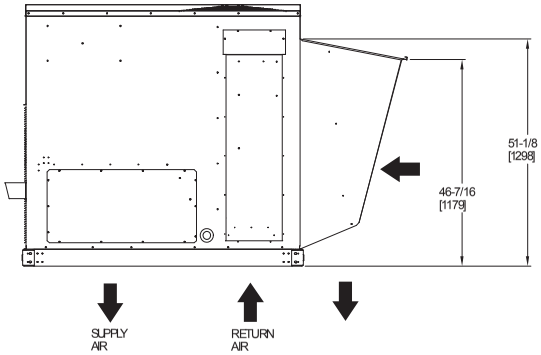

HORIZONTAL ECONOMIZER

SHEET	DATE	SUPERCEDES			REV
2 OF 2	05/08/13	-	48LC09-12 SINGLE ZONE ELECTRICAL COOLING WITH GAS HEAT	48LC500390	A

C-162

Service Clearance

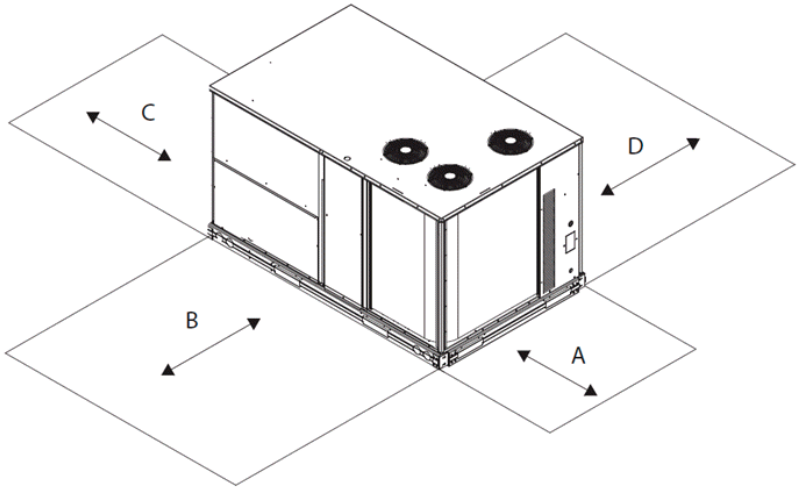

C1057B

LOCATION	DIMENSION	CONDITION
A	48-in (1219 mm)	• Unit disconnect is mounted on panel
	18-in (457 mm)	• No disconnect, convenience outlet option • Recommended service clearance
	12-in (305 mm)	• Minimum clearance
B	42-in (1067 mm)	• Surface behind servicer is grounded (e.g., metal, masonry wall)
	36-in (914 mm)	• Surface behind servicer is electrically non-conductive (e.g., wood, fiberglass)
	Special	• Check for sources of flue products within 10-ft of unit fresh air intake hood
C	36-in (914 mm)	• Side condensate drain is used
	18-in (457 mm)	• Minimum clearance
D	48-in (1219 mm)	• No flue discharge accessory installed, surface is combustible material
	42-in (1067 mm)	• Surface behind servicer is grounded (e.g., metal, masonry wall, another unit)
	36-in (914 mm)	• Surface behind servicer is electrically non-conductive (e.g., wood, fiberglass)
	Special	• Check for adjacent units or building fresh air intakes within 10-ft of this unit's flue outlet

NOTE: Unit not designed to have overhead obstruction. Contact Application Engineering for guidance on any application planning overhead obstruction or vertical clearances.

Chassis 5

C-163

Part Number:48LCD009E2M5-0E4B0

ARI EER:	**13.50**	
IEER:	**20.8**	

Base Unit Dimensions

Unit Length:	**115.9**	in
Unit Width:	**63.4**	in
Unit Height:	**58.8**	in

Operating Weight

Base Unit Weight:	**1606**	lb
CO2 Sensor:	**5**	lb
Medium Static Belt Drive with VFD Controller:	**45**	lb
Al/Cu - Al/Cu - Louvered Hail Guards:	**45**	lb
Hinged Access Panels and Unpowered Convenience Outlet:	**10**	lb
HACR Breaker:	**10**	lb
Total Operating Weight:	**1721**	lb

Unit

Unit Voltage-Phase-Hertz:	**208-3-60**	
Air Discharge:	**Vertical**	
Fan Drive Type:	**Belt**	
Actual Airflow:	**3400**	CFM
Site Altitude:	**554**	ft

Cooling Performance

Condenser Entering Air DB:	**89.0**	F
Evaporator Entering Air DB:	**78.6**	F
Evaporator Entering Air WB:	**65.9**	F
Entering Air Enthalpy:	**30.93**	BTU/lb
Evaporator Leaving Air DB:	**56.3**	F
Evaporator Leaving Air WB:	**55.7**	F
Evaporator Leaving Air Enthalpy:	**23.80**	BTU/lb
Gross Cooling Capacity:	**106.89**	MBH
Gross Sensible Capacity:	**80.10**	MBH
Compressor Power Input:	**6.20**	kW
Coil Bypass Factor:	**0.030**	

Mixed Air

Outdoor Air Airflow:	**680**	CFM
Outdoor Air DB:	**89.0**	F
Outdoor Air WB:	**73.0**	F
Outdoor Air Htg. Temp.:	**1.0**	F
Return Air DB:	**76.0**	F
Return Air WB:	**64.0**	F
Return Air Htg. Temp.:	**70.0**	F

Heating Performance

Heating Airflow:	**3400**	CFM
Entering Air Temp:	**56.2**	F
Leaving Air Temp:	**89.5**	F
Gas Heating Input Capacity:	**120.0 / 150.0**	MBH
Gas Heating Output Capacity:	**96.0 / 120.0**	MBH
Temperature Rise:	**33.3**	F
Thermal Efficiency (%):	**80.0**	

Supply Fan

External Static Pressure:	**0.50**	in wg
Options / Accessories Static Pressure		

Economizer:	**0.02**	in wg
Total Application Static (ESP + Unit Opts/Acc.):	**0.52**	in wg
Fan RPM:	**574**	
Fan Power:	**1.07**	BHP
NOTE:	**Selected IFM RPM Range: 547 - 757**	

Electrical Data

Voltage Range:	**187 - 253**
Compressor #1 RLA:	**13.2**
Compressor #1 LRA:	**88**
Compressor #2 RLA:	**15.9**
Compressor #2 LRA:	**110**
Indoor Fan Motor Type:	**MED**
Indoor Fan Motor FLA:	**7.1**
Combustion Fan Motor FLA (ea):	**0.48**
Power Supply MCA:	**46**
Disconnect Size FLA:	**48**
Disconnect Size LRA:	**231**
Electrical Convenience Outlet:	**None**
Outdoor Fan [Qty / FLA (ea)]:	**3 / 1.8**
Power Supply HACR:	**60**

Control Panel SCCR: 5kA RMS at Rated Symmetrical Voltage

Acoustics

Sound Power Levels, db re 10E-12 Watts

	Discharge	Inlet	Outdoor
63 Hz	95.5	92.8	89.3
125 Hz	91.1	83.1	86.0
250 Hz	74.5	64.4	82.9
500 Hz	69.3	63.1	80.7
1000 Hz	63.5	60.6	78.5
2000 Hz	60.8	55.9	73.6
4000 Hz	64.8	55.1	69.6
8000 Hz	63.6	54.2	64.5
A-Weighted	77.6	71.2	83.0

Advanced Acoustics

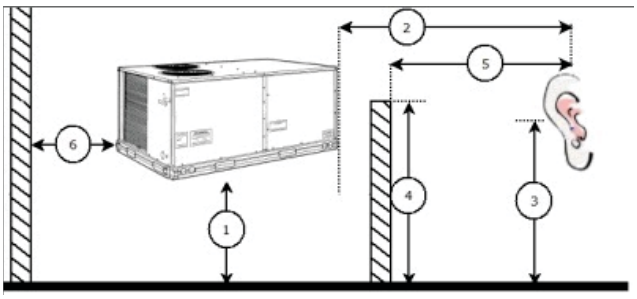

Advanced Accoustics Parameters

1. Unit height above ground:	**30.0**	ft
2. Horizontal distance from unit to receiver:	**50.0**	ft
3. Receiver height above ground:	**5.7**	ft
4. Height of obstruction:	**0.0**	ft
5. Horizontal distance from obstruction to receiver:	**0.0**	ft
6. Horizontal distance from unit to obstruction:	**0.0**	ft

Detailed Acoustics Information

Octave Band Center Freq. Hz	63	125	250	500	1k	2k	4k	8k	Overall
A	89.3	86.0	82.9	80.7	78.5	73.6	69.6	64.5	92.2 Lw
B	63.1	69.9	74.3	77.5	78.5	74.8	70.6	63.4	83.2 LwA
C	56.9	53.6	50.5	48.3	46.1	41.2	37.2	32.1	59.8 Lp
D	30.7	37.5	41.9	45.1	46.1	42.4	38.2	31.0	50.8 LpA

Legend
A Sound Power Levels at Unit's Acoustic Center, Lw
B A-Weighted Sound Power Levels at Unit's Acoustic Center, LwA
C Sound Pressure Levels at Specific Distance from Unit, Lp
D A-Weighted Sound Pressure Levels at Specific Distance from Unit, LpA

Calculation methods used in this program are patterned after the ASHRAE Guide; other ASHRAE Publications and the AHRI Acoustical Standards. While a very significant effort has been made to insure the technical accuracy of this program, it is assumed that the user is knowledgeable in the art of system sound estimation and is aware of the tolerances involved in real world acoustical estimation. This program makes certain assumptions as to the dominant sound sources and sound paths which may not always be appropriate to the real system being estimated. Because of this, no assurances can be offered that this software will always generate an accurate sound prediction from user supplied input data. If in doubt about the estimation of expected sound levels in a space, an Acoustical Engineer or a person with sound prediction expertise should be consulted.

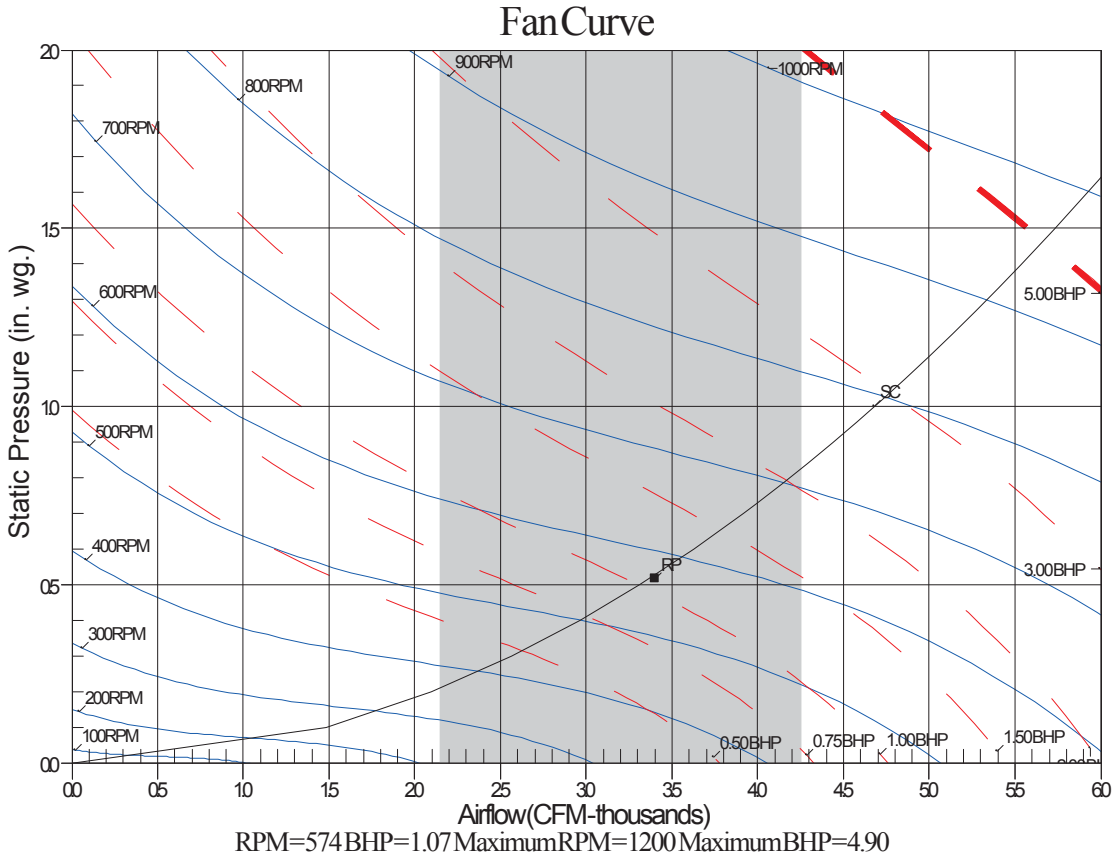

RPM=574 BHP=1.07 Maximum RPM=1200 Maximum BHP=4.90
Note: Please contact application engineering for selections outside the shaded region.
SC-System Curve RP-Rated Point

WeatherExpert® - 48LC

PACKAGED ROOFTOP GAS HEATING/ELECTRIC COOLING UNITS
6, 7.5, 8.5 and 10 TONS

Optional Economizer Shown

WeatherExpert® - 48LC

48LC units are ultra high-efficiency, single-packaged electric cooling, gas heating units. Units utilize three stages of cooling capacity control with matching indoor fan motor speed control. All models are available with belt drive indoor fan motors with Variable Frequency Drive (VFD) speed controller and Direct Dive - ECM outdoor fan motor.
Models offer standard electro mechanical controls that use Carrier's Comfort Control Logic and LED indicators.

All units are factory tested in both heating and cooling modes, and rated in accordance with AHRI Standards 340/360.

STANDARD FEATURES INCLUDE:
- Puron® (R-410A) HFC refrigerant factory charged
- IEER's up to 20.8 and EER's up to 13.5
- ASHRAE 90.1 compliant, Energy Star qualified
- Meets or exceeds CEE tier II performance criteria
- Three stage cooling capacity control with crankcase heaters
- Single refrigerant circuit with full face activated evaporator coil.
- Belt drive indoor fan and pulley system with Variable Frequency Drive(VFD) motor controller on all models
- High efficient ECM outdoor fan motor
- Sound levels as low as 82 dB.
- Precision sized TXV refrigerant metering devices
- Exclusive non-corrosive composite condensate pan in accordance with ASHRAE Standard 62, sloping design, side or center drain
- Standard ambient cooling operation down to 40°F (4°C) with lower operation range with integrated economizer. SystemVu™ controls allows operation down to 0°F (-18°C). All units operate up to and to 125°F (52°C).
- Designed in accordance with UL, Standard 1995
- High performance 5/16" diameter, internally enhanced copper tube / aluminum fin condenser and evaporator coils
- Pre-painted exterior panels and primer-coated interior panels tested to 500 hours salt spray protection
- Exclusive IGC solid-state control for on-board diagnostics with LED error code designation burner control logic and energy saving indoor fan motor delay
- Induced draft gas heat combustion design
- Redundant gas valves with up to two stages of heating
- Low pressure and high pressure switch protected.

MAINTENANCE FEATURES:
- Access panels with easy grip handles and tool-less filter access door
- Innovative easy starting, no-strip screws on unit access panels
- Two-inch disposable return air filters

INSTALLATION FEATURES:
- Thru-the-bottom power entry capability
- Single point gas and electric connections
- Full perimeter base rail with built-in rigging adapters and fork slots
- Field convertible from vertical to horizontal airflow on all models. 08-12 models require an easy field installed supply duct kit.

STANDARD LIMITED PARTS WARRANTY:
- 10-year parts heat exchanger – 15-year stainless steel option
- 5-year compressor parts, 1-year parts, 3-year SystemVu™
- Many optional upgrades available

OPTIONS/ACCY INCLUDE BUT ARE NOT LIMITED TO:
- Supply and Return air smoke detectors, high static motors
- Louvered condenser coil guards and coil coating options
- Ultra Low Leak Economizer and convenience outlet options
- Stainless Steel heat exchanger
- HACR breaker or non-fused disconnect switch
- Hinged access panels with quick turn latches and lift tabs
- Patented Humidi-MiZer® adaptive dehumidification system
- RTU Open multi-protocol DDC controller
- SystemVu Controls:
  - Large full text – multi line display
  - USB Flash Port for data transfer
  - Built in i-Vu®, CCN and BACnet®
  - Refrigerant pressure from display
  - Quick LED Status – Run, Alert, Fault
  - Conventional Stat or Sensor capabilities
  - Historical component runtime and starts

Unit Report For ACCU-FUR

Project: 5 Ton System 02/16/2017
Prepared By: Ahmed Hassan

Outdoor Unit Parameters

Unit Model: **24ANB**
Unit Size: **5 Tons (Size 60)**
Voltage: **208/230-1-60** V-Ph-Hz

Indoor Coil Parameters

Unit Model: **CNPV**
Unit Size: **5 Tons (Size 60)**
Cabinet Finish: **Painted**
Cabinet Width: **24 inch**
Refrigerant Type: **Puron**

Outdoor Unit Dimensions and Weight

Unit Length: **35** in
Unit Width: **35** in
Unit Height: **40.375** in
Unit Shipping Weight: **353.** lb

Indoor Coil Dimensions and Weight

Unit Length: **21** in
Unit Width: **24.5** in
Unit Height: **26.875** in
Unit Shipping Weight: **78.** lb

RESIDENTIAL APPLICATIONS

This warranty is to the original purchasing owner and subsequent owners only to the extent and as stated in the Warranty Conditions and below. The limited warranty period in years, depending on the part and the claimant, is as shown in the table below.

Limited Warranty (Years)		
Item	**Original Owner**	**Subsequent Owner**
Parts	10* (or 5)	5
Compressor	10* (or 5)	5

***If properly registered within 90 days of original installation, otherwise 5 years (except in California and Quebec and other jurisdictions that prohibit warranty benefits conditioned on registration). See Warranty Conditions below.**

OTHER APPLICATIONS

The warranty period is five (5) years on the compressor, and one (1) year on all other parts. The warranty is the original owner only and is not available for subsequent owners.

Ordering Information

Part Number	Description	Quantity
Outdoor Unit		
24ANB760AB03	Infinity Series Two-Stage Air Conditioner w/ Puron 5 Tons Cooling	1
	17 SEER @ ARI Conditions	
Indoor Coil		
CNPVP6024ALA	Cased Vertical N-Coil Evaporator Coil with Puron	1
	Painted	
	24 inch	
	Aluminum	
Furnace		
59SP5A080E21--20	59SP5 Performance +95 Single Stage Condensing Gas Furnace	1
	+95 AFUE	
	80,000 Btuh (Size 080)	
	Up to 2000 Clg CFM on Evap Coil	
	Energy Efficient	

Unit Report For ACCU-FUR

Project: 5 Ton System 02/16/2017
Prepared By: Ahmed Hassan

	21.0 inches	
Accessories		
KGAVT0801CVT	Concentric Vent Kit (ULCS636) for Furnace	1

Furnace Parameters and Dimensions and Weight

Furnace:	**SEER Enhancing Furnace**	
Furnace Model:	**59SP**	
Furnace Efficiency:	**+95 AFUE**	
Htg Capacity:	**80,000 Btuh (Size 080)**	
Airflow:	**Up to 2000 Clg CFM on Evap Coil**	
Unit Length:	**29.50**	in
Unit Width:	**21.00**	in
Unit Height:	**35.00**	in
Unit Shipping Weight:	**155.5**	lb

The Product and Ratings Data in this program is subject to change at any time and without notice. Please refer to the latest product literature and the AHRI directory at www.ahridirectory.org for the most up-to-date information.

Performance Summary For ACCU-FUR

Project: 5 Ton System 02/16/2017
Prepared By: Ahmed Hassan

System Performance

System:	**24ANB/CNPV**	
System Quantity:	**1**	
Altitude:	**0.0**	ft
Furnace Type:	**59*P5A080E21**20**	
Linear Pipe Length:	**0.0**	ft
SEER @ ARI Conditions:	**15.0**	
EER @ ARI Conditions:	**12.0**	

Actual Clg Airflow:	**2000.0**	CFM
Standard Clg Airflow:	**2000.0**	CFM
Total Net Clg Capacity:	**55.56**	MBH
Net Sensible Clg Capacity:	**43.32**	MBH
Total System Power:	**4.68**	kW

System Parameters

Outdoor Unit Parameters

Unit Model:	**24ANB760AB03**	
Unit Size (Nominal):	**5 Tons (Size 60)**	
Voltage:	**208/230-1-60**	V-Ph-Hz
Clg Ent Air DB Ambient:	**95.0**	°F

Indoor Coil Parameters

Unit Model:	**CNPVP6024ALA**	
Unit Size (Nominal):	**5 Tons (Size 60)**	
Ent Air DB:	**80.00**	°F
Ent Air WB:	**67.00**	°F
Ent Enthalpy:	**31.44**	BTU/lb
Lvg Air DB:	**59.95**	°F
Lvg Air WB:	**58.36**	°F
Lvg Enthalpy:	**25.26**	BTU/lb
Total External Static Pressure:	**0.50**	in wg

Furnace Ratings

Furnace:	**59SP5A080E21--20**	
Furnace Efficiency:	**+95 AFUE**	
Input Max Heat:	**80,000**	BTU/hr
Output Max Heat:	**78,000**	BTU/hr

Furnace Performance

Certified Temp High Rise Range:	**40-70**	F

The customer must ensure the specified airflow and static pressure are within furnace capabilities.

Electrical Data

Outdoor Electrical Data

Unit Voltage:	**208/230-1-60**	V-Ph-Hz
Fan Motor FLA:	**1.30**	Amps
MCA:	**37.3**	Amps
Max Fuse:	**60**	Amps
Operating Range Min:	**197**	V
Operating Range Max:	**253**	V
Compressor RLA:	**28.8**	Amps
Compressor LRA:	**152.9**	Amps

Furnace Electrical Data

Unit Voltage:	**115-1-60**	V-Ph-Hz
Unit MCA:	**13.0**	Amps
Unit MOCP:	**20**	Amps

Acoustic Summary For ACCU-FUR

Project: 5 Ton System 02/16/2017
Prepared By: Ahmed Hassan

Outdoor Unit Parameters:

Unit Model: **24ANB**
Unit Size: **5 Tons (Size 60)**
Variations: **Standard**

Octave Band Center Frequency, Hz	63	125	250	500	1k	2k	4k	8k	dBA
Sound Power,dB	0.0	53.5	60.5	63.5	67.0	62.0	60.5	56.0	
A-Weighted Sound Power, dBA									72.0

Indoor Coil Parameters:

Unit Model: **CNPV**
Unit Size: **5 Tons (Size 60)**
Cabinet Finish: **Painted**
Cabinet Width: **24 inch**

No Indoor sound data available.

The Product and Ratings Data in this program is subject to change at any time and without notice. Please refer to the latest product literature and the AHRI directory at www.ahridirectory.org for the most up-to-date information.

Certified Drawing For ACCU-FUR

Project: 5 Ton System
Prepared By: Ahmed Hassan

02/16/2017

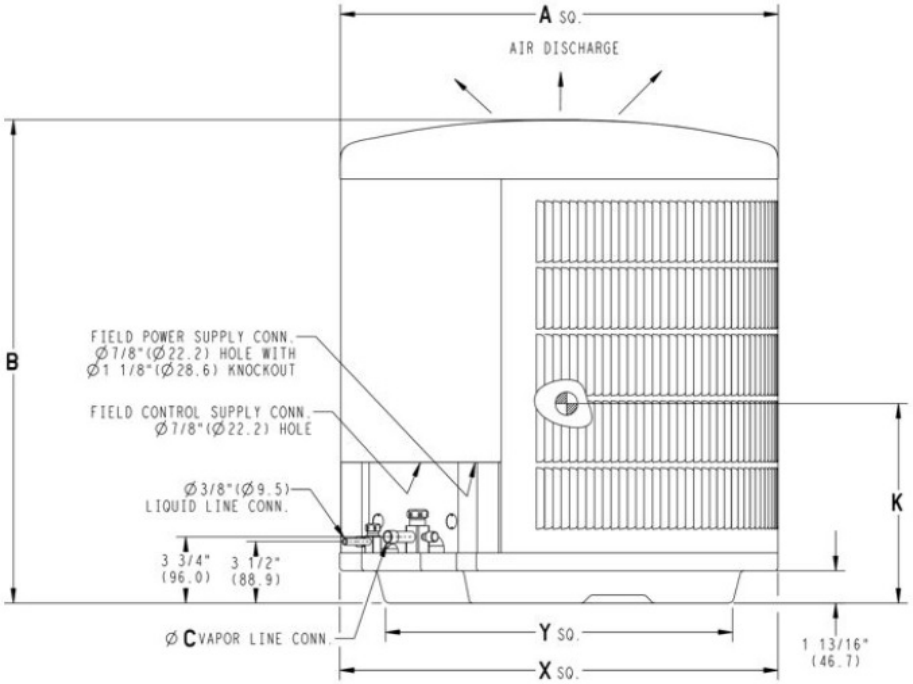

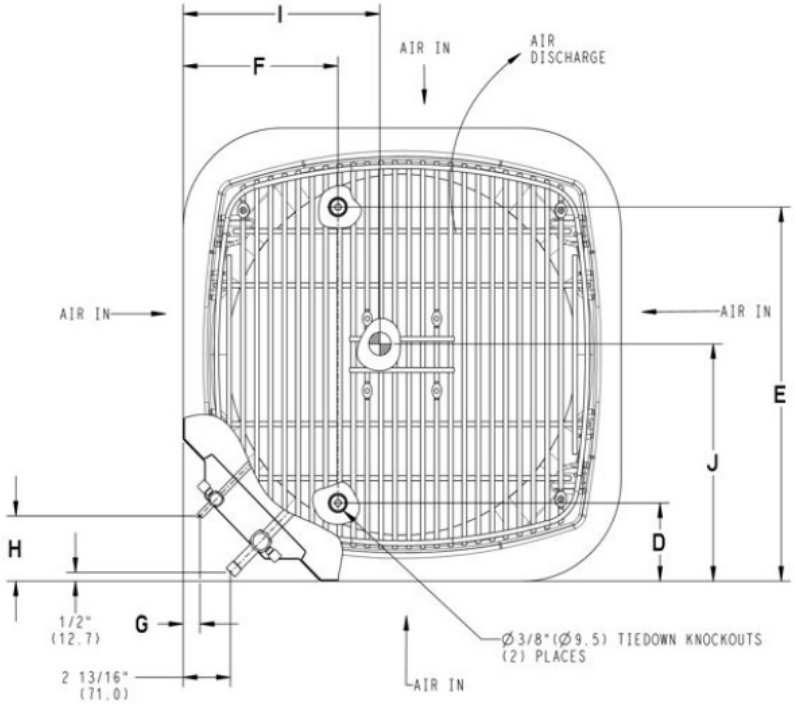

Outdoor Model

Unit Model: **24ANB**
Unit Size: **5 Tons (Size 60)**
Voltage: **208/230-1-60** V-Ph-Hz
SEER: **17**
PartNumber: **24ANB760AB03**

Shipping Dimensions and Weights	Outdoor Unit
Height	45.25 in
Width	37.13 in
Length	37.13 in
Operating Weight	311. lb
Shipping Weight	353. lb

Dimensions										
A	B	C	D	E	F	G	H	I	J	K
35.00 in	40.38 in	0.88 in	6.56 in	28.44 in	9.13 in	0.31 in	3.00 in	16.50 in	16.25 in	17.50 in

The Product and Ratings Data in this program is subject to change at any time and without notice. Please refer to the latest product literature and the AHRI directory at www.ahridirectory.org for the most up-to-date information.

Certified Drawing For ACCU-FUR

Project: 5 Ton System- 17 SEER
Prepared By: Ahmed Hassan

02/16/2017

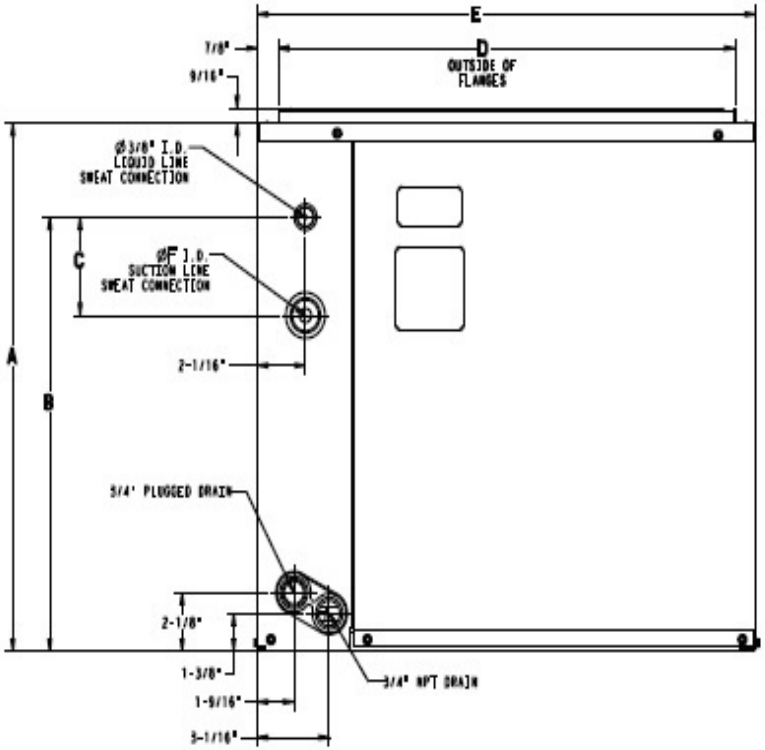

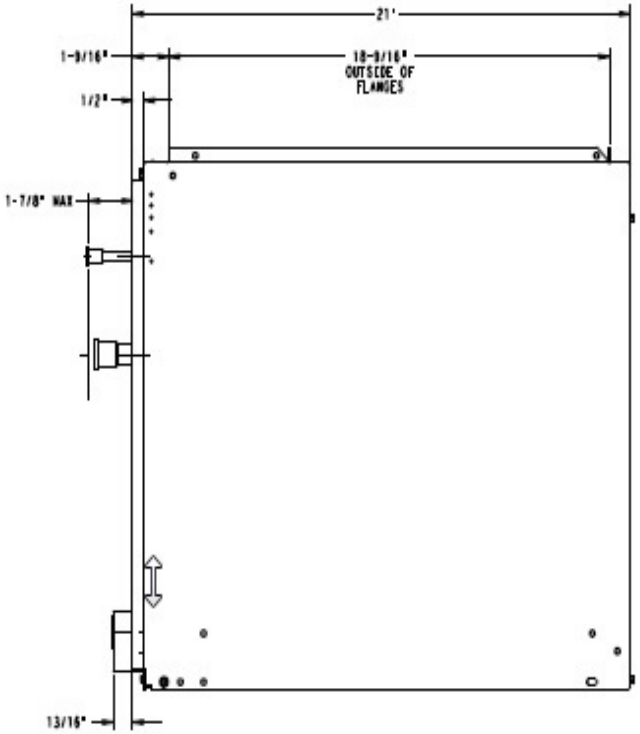

Indoor Coil

Unit Model:.....**CNPV**
Unit Size:.....**5 Tons (Size 60)**
Cabinet Finish:.....**Painted**
Cabinet Width:.....**24 inch**
PartNumber:.....**CNPVP6024ALA**

Dimensions and Weights	Indoor Coil
Height	26.88 in
Width	24.50 in
Length	21.00 in
Shipping Weight	78. lb

Dimensions					
A	B	C	D	E	F
26.88 in	17.94 in	3.56 in	22.75 in	24.50 in	0.88 in

The Product and Ratings Data in this program is subject to change at any time and without notice. Please refer to the latest product literature and the AHRI directory at www.ahridirectory.org for the most up-to-date information.

Certified Drawing For ACCU-FUR

Project: 5 Ton System
Prepared By: Ahmed Hassan

02/16/2017

NOTES:
1. Doors may vary by model.
2. Minimum return-air openings at furnace, based on metal duct. If flex duct is used, see flex duct manufacturer's recommendations for equivalent diameters.
   a. For 800 CFM-16-in. (406 mm) round or 14 1/2 x 12-in. (368 x 305 mm) rectangle.
   b. For 1200 CFM-20-in. (508 mm) round or 14 1/2 x 19 1/2-in. (368 x 495 mm) rectangle.
   c. For 1600 CFM-22-in. (559 mm) round or 14 1/2 x 22 1/16-in. (368 x 560mm) rectangle.
   d. Return air above 1800 CFM at 0.5 in. w.c. ESP on 24.5" casing, requires one of the following configurations: 2 sides, 1 side and a bottom or bottom only. See Air Delivery table in this document for specific use to allow for sufficient airflow to the furnace.
3. Vent and Combustion air pipes through blower compartment must use accessory "Vent Kit - Through the Cabinet". See accessory list for current part number.

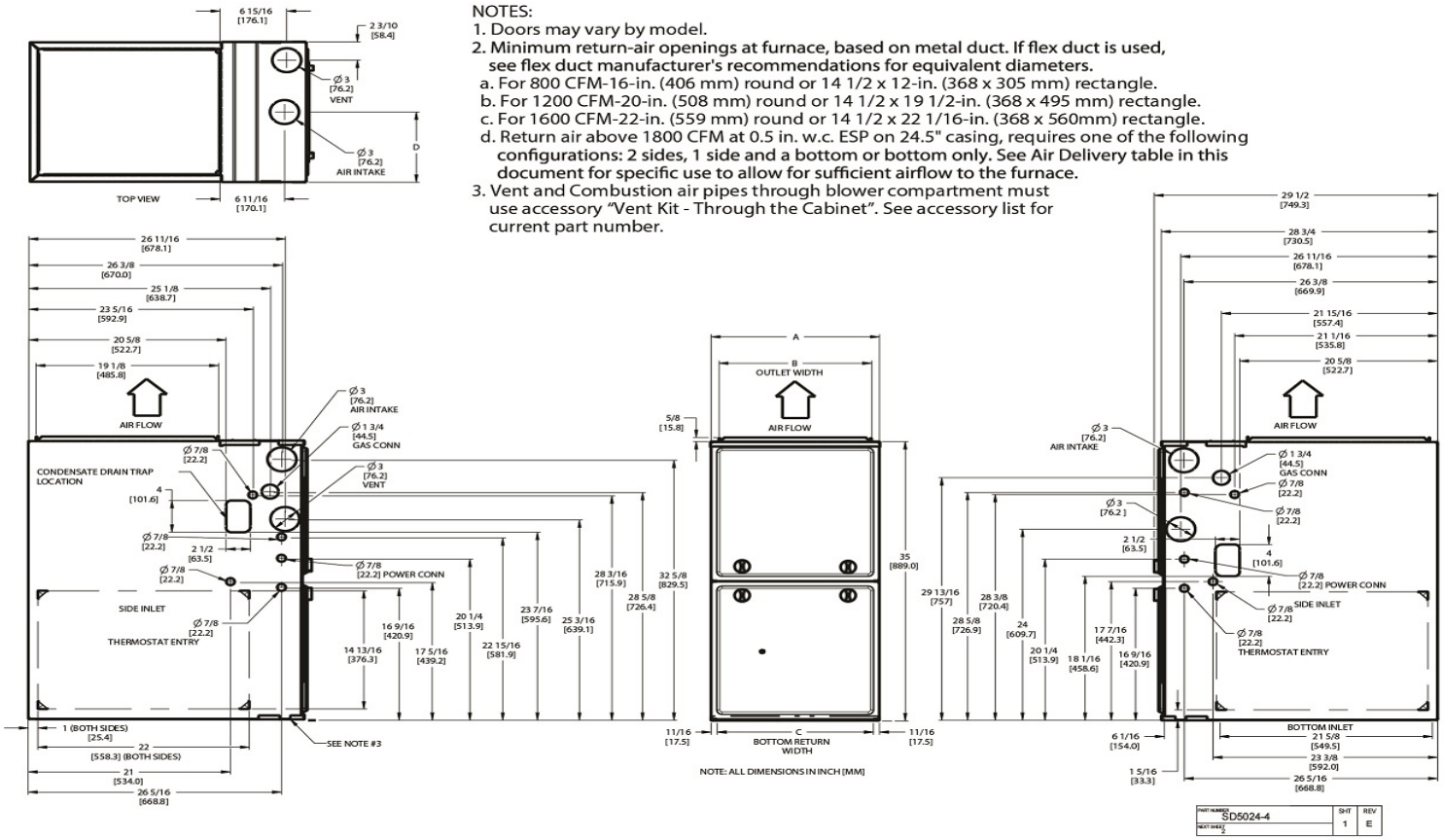

DIMENSIONAL DRAWING

Furnace Model: **59SP**
Furnace Efficiency: **+95 AFUE**
Htg Capacity: **80,000 Btuh (Size 080)**

Airflow: **Up to 2000 Clg CFM on Evap Coil**
PartNumber: **59SP5A080E21--20**

Dimensions				
A	B	C	D	Shipping Wgt
21.00 in	19.38 in	19.50 in	10.50 in	155.50 in

The Product and Ratings Data in this program is subject to change at any time and without notice. Please refer to the latest product literature and the AHRI directory at www.ahridirectory.org for the most up-to-date information.

Infinity® Series

Air Conditioners

Carrier®

turn to the experts℠

Two-Stage, Extra-Efficient Air Conditioners
with up to 21.0 SEER

Innovation and the Environment

Over 100 years ago, a humble but determined engineer solved one of mankind's most elusive challenges by controlling the indoor environment. A leading engineer of his day, Dr. Willis Carrier would file more than 80 patents over the course of his career. His genius would enable incredible advancements in health care, manufacturing processes, food preservation, art and historical conservation, indoor comfort and much more.

Carrier's foresight changed the world forever and paved the way for over a century of once-impossible innovations. Yet in addition to being an accomplished inventor, he was also an avid outdoorsman. Carrier recognized the power and beauty of the natural environment. This appreciation of our world and its resources continues to guide Carrier Corporation today. We will never rest on our accomplishments, but instead consistently look for ways to improve our products, our environment and our world.

Carrier® Infinity® series two-stage air conditioners offer proof of this commitment by delivering reduced energy usage and enhanced comfort control in the environment that matters most – your home.

Leaders in Technology

As an ENERGY STAR® partner, Carrier Corporation has determined that the Infinity series air conditioners meet ENERGY STAR guidelines for energy efficiency.

Proper sizing and installation of equipment is critical to achieve optimal performance. Split system air conditioners and heat pumps must be matched with appropriate coil components to meet ENERGY STAR criteria. Ask your dealer for details or visit www.energystar.gov.

1 Extra-Consistent Comfort

Standard systems mindlessly blast cooled air at one speed before shutting off, which can lead to widely fluctuating temperatures. The Infinity® series air conditioners with two-stage scroll compressor run on low-stage up to 80% of the time to maintain consistent comfort. Two-stage operation also contributes to reduced energy usage, helping achieve up to 21.0 SEER cooling efficiency.

2 Environmentally Sound Refrigerant

Carrier led the industry by incorporating non-ozone-depleting Puron® refrigerant into air conditioners back in 1996. Millions of Puron refrigerant units in operation today are a testament to the reliability, durability and enduring quality of these products.

3 Maximum Comfort and Peace of Mind

By combining the intuitive Infinity control with the Infinity control board in the air conditioner itself, Carrier puts maximum comfort at your fingertips. You control comfort schedules, temperature, humidification, dehumidification, fan speeds and more, all from one easy-to-use control on the wall in your home. This system monitors air conditioner functions, makes adjustments to maximize performance and provides maintenance reminders on the Infinity control.

4 Quiet Operation

Infinity two-stage air conditioners quietly cool your home with sound levels as low as 66 dBA. Our exclusive Silencer System II™ features a silencer top, integrated fan motor, forward-swept fan blades, compressor vibration isolator plate, sound hood and split-post compressor grommets to help deliver quiet operation by maximizing airflow and minimizing vibration.

Comparison Sound Ratings
(decibels)

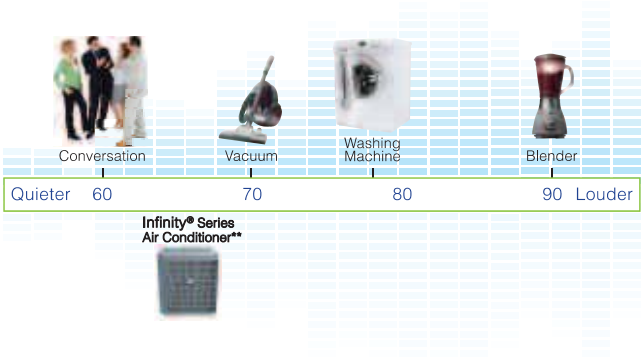

** Per standard testing as described by ARI 270-95.
Other sound levels, mentioned for comparison, as published at http://www.nidcd.nih.gov/health/education/teachers/common_sounds.asp.

It's About Your Comfort

The Carrier® Infinity® series air conditioners represent years of design, development and testing with one goal in mind – making you more comfortable. We have taken the lead in creating new technologies that deliver the comfort and efficiency you deserve while staying ahead of industry trends and global initiatives.

All year long, humidity affects the temperature at which you feel most comfortable. That's why Carrier Ideal Humidity System® technology plays such an important role in your comfort. When you add the Infinity control, Carrier humidifier and variable-speed furnace to the Infinity air conditioner, Ideal Humidity System technology allows you to control humidity levels even when your system isn't actively heating or cooling.† You'll feel cooler at higher temperatures in the summer and warmer at lower temperatures in the winter.

Carrier gives you ultimate command of comfort, performance and energy savings when you include an Infinity control and Infinity variable-speed furnace to create an Infinity system. This system provides unprecedented control of not only temperature, but also humidity, dehumidification, fan speed, weekly comfort schedules and more. This smart system can even monitor operation and maintenance items and provide service reminders such as when it's time to change the filter.

Puron® refrigerant is environmentally sound and won't deplete the ozone layer. Carrier systems with Puron refrigerant set the standard for environmentally sound air conditioner and heat pump performance well ahead of industry competitors. Today, Carrier air conditioners and heat pumps using Puron refrigerant show exceptional reliability and are a testament to our industry leadership.

† Ideal Humidity System technology continually monitors indoor humidity, indoor temperature and outdoor temperature, and has the ability to turn on your comfort system just for dehumidification.

Uncompromising Quality

You don't lead an industry for more than 100 years by accident. Carrier has maintained its position and reputation through diligent, uncompromising quality control at every stage of a product's life – from concept to completion. Once our product is installed at your home, you can be confident that durable construction and built-in reliability features ensure your comfort for years to come.

- Built-in reliability: Forward-swept fan blades enhance performance and maximize sound reduction. Smart electronics that monitor system operation and a compressor-protecting filter drier help keep critical components operating at their best.
- Durability: WeatherArmor Ultra™ protection shields the outdoor unit from hail, errant soccer balls, lawn equipment and other hazards. Our combination of a galvanized steel cabinet, louvered coil guard and baked-on powder paint provides superior rust protection and keeps your system looking its best for years.

Limited Warranty

To the original owner, the Carrier Infinity series two-stage air conditioners are covered by a 10-year parts limited warranty upon timely registration of your new equipment.* Ask your Carrier dealer about optional labor warranties.

*Warranty period is five years if not registered within 90 days. Jurisdictions where warranty restrictions are not allowed will automatically receive a 10-year parts warranty. See warranty certificate at carrier.com for complete details.

What Efficiency Means to You

Air conditioners are powered by electricity. You can compare efficiencies of different air conditioner models by checking the SEER (Seasonal Energy Efficiency Ratio) ratings, available through your Carrier dealer or manufacturer web sites. The published ratings provide a standardized method for comparing how much cooling performance you get for the electricity you use.

Using these ratings is a lot like miles per gallon for your car – the higher the number, the more efficient the product and the greater potential for savings. Actual air conditioner performance will vary based on the age and condition of your home, personal comfort preferences, weather patterns in your area and much more.

So when you are comparing air conditioners, be sure to look at the SEER ratings before you make your decision.

Extra-Efficient Air Conditioner Designed with Your Comfort in Mind

Greater Operational Efficiency

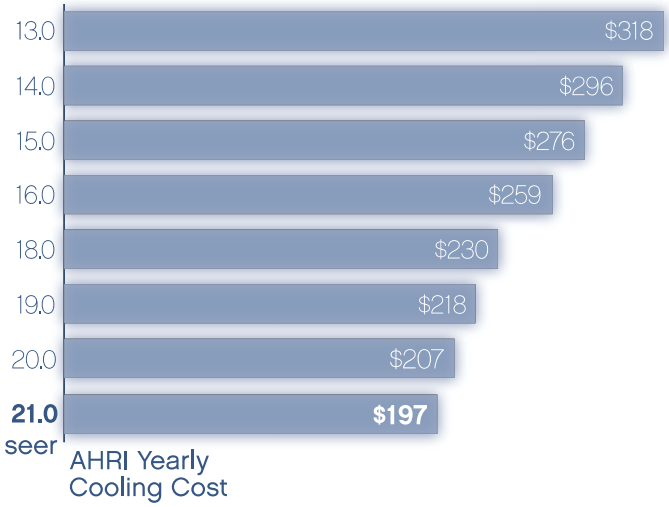

Infinity® series two-stage air conditioners offer plenty of potential for annual savings while providing extra-comfortable cooling. When compared to a standard efficiency air conditioner, you can save up to $121 a year.†† And, if you are replacing an older, less efficient model, the savings can be even more significant.

††Values based on AHRI method for estimated operating cost using U.S. average cooling hours.

UP TO 21.0 SEER RATING

Infinity two-stage air conditioners offer a range of efficiencies up to 21.0 SEER to potentially reduce your energy usage and environmental impact.

Carrier® Systems for Unmatched Performance in Every Season

Willis Carrier's meticulous attention to quality and detail led to a major culture shift in the way we live indoors. More than a century later, Carrier Corporation operates with a unique willingness to develop new technology, the confidence to revise proven designs and the ability to deliver results with every new installation.

Part of that equation is our nationwide network of experts you can turn to for all of your indoor comfort needs. Your local Carrier dealer is well equipped to evaluate your home – everything from size, window placement, ductwork, venting and other structural specifics – and create a customized system designed around your lifestyle. So when it's time to make a choice for your family's comfort, make the best decision you'll ever make – Carrier – and let the experts do the rest.

The Total Indoor Comfort System

Infinity® Air Conditioner provides reliable, high-efficiency cooling for long-lasting comfort and energy savings.

Infinity Gas Furnace provides reliable, high-efficiency heating for long-lasting comfort and energy savings.

Evaporator Coil is matched with the proper outdoor unit to provide top cooling efficiency and years of reliable service.

Infinity Air Purifier improves air quality by capturing and killing airborne bacteria and viruses and other irritating airborne pollutants in your home.

Ventilator combines fresh outdoor air with conditioned indoor air for improved air quality and maximum efficiency – great for today's tightly constructed home.

Humidifier replenishes moisture to dry air.

Zoning sets different temperatures for up to eight different areas of your home for truly customized comfort and enhanced utility savings.

UV Lamp inhibits the growth of contaminants on the indoor coil, leaving your home with cleaner, fresher indoor air.

Infinity Control is more than just a thermostat. It's your interface to the Infinity System that allows you to control temperature, humidity, air quality, fan speed and ventilation.

Models 24ANB1, 24ANB7
© Carrier Corporation 4/2011 01-824-054-25

Canada ENERGUIDE
Seasonal Energy Efficiency Ratio (SEER)
Central Air Conditioner
THIS MODEL 16.0 - 21.0
13.0 — Uses least energy → 24.5%

c UL us

AHRI CERTIFIED™ www.ahridirectory.org

Always look for these symbols, the air conditioner industry seals of certified performance, efficiency and capacity.

Always Ask For FACTORY AUTHORIZED PARTS

www.carrier.com 1-800-CARRIER

A member of the United Technologies Corporation family. Stock Symbol UTX.

Manufacturer reserves the right to discontinue, or change at any time, specifications or designs without notice or without incurring obligations.

Carrier®
turn to the experts℠

WEIL-McLAIN®
www.weil-mclain.com

Evergreen™

HIGH-EFFICIENCY CONDENSING BOILER

Water | Natural/Propane Gas | 220-399 MBH | 3 Sizes
Direct Vent | 95% AFUE*

Evergreen™

Easy heat, Effortless comfort

DURABLE
Stainless steel fire tube heat exchanger

FLEXIBLE
24-zone capacity
Floor standing/wall mount

EASY
Control presets
Accessible parts

*Evergreen 399 rating is combustion efficiency

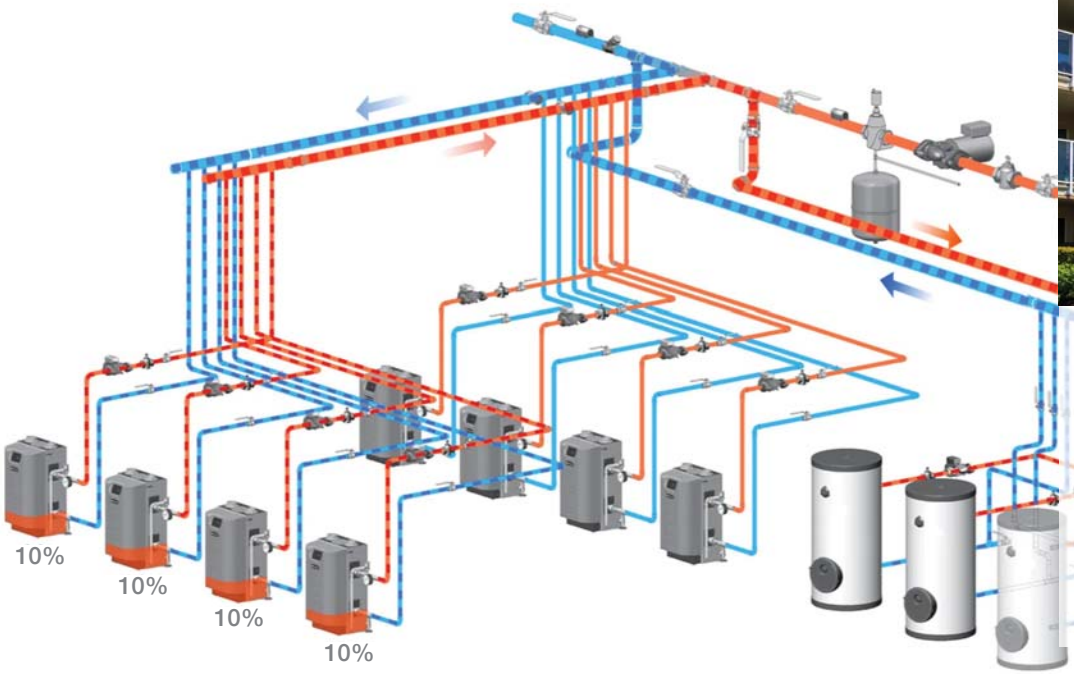

ZONESTACKING

Enables all zone capabilities of each individual boiler when connected on a cascaded network of boilers. With the Evergreen boiler, the number of programmable zones is three times the number of boilers on the network, up to eight boilers.

COMMERCIAL

Familiar interface - innovative technology

As our technology has advanced to create smoother, more efficient operations, we've kept the interface of the Evergreen boiler familiar, simple to use and easy to learn.

- For the residential and light commercial customer who requires a multiple boiler setup, the Evergreen provides **ZoneStacking** - 24 zone capability **without** an additional external 3rd party control.
- **ZoneStacking** reduces the installation costs and time while increasing reliability. With this advanced control feature, the Evergreen boiler maintains optimal efficiency through lead-lag rotation and balanced heat loading.

EASE OF INSTALLATION

- Setup wizard efficiently guides the installer through a single or multiple boiler installation in minutes
- For the contractor, installer and/or service provider, the Evergreen has an easy to understand graphical user Interface and makes programming and monitoring operations simple
- Wiring diagrams provided are clear and easily accessible

EASE OF USE

- Ability to control multiple boilers with lead-lag capability without an external device
- Interactive diagnostic capability
- Reliable operation
- Easy to understand and monitor controls
- Effortless heating and comfort in all zones

EASE OF MAINTENANCE

- Large, accessible panels for quick and easy maintenance checks
- Interactive diagnostic capability provides a snapshot of the past and current operation parameters
- Reliable operation of the complete heating system including radiant elements
- Sentinel X100® inhibitor is included with the boiler to ensure the water chemistry is optimal for heating system efficiency

APPLICATIONS

The new Evergreen™ boiler extends comfort levels to every area of your property for the long run. The Evergreen is perfect for light commercial or large residential applications and single or multi-unit installations with **ZoneStacking**™ up to 24 programmable zones.

It's everything you want in heating: quiet operation, aesthetically pleasing design, floor standing or wall mount options, environmental sustainability with Low NOx, heating comfort with lower utility bills* and more.

RESIDENTIAL

Stay *effortlessly comfortable* in any home environment with the new Evergreen boiler. The quiet operation of the Evergreen further enhances the sense of "invisible" heat, from multiple in-home zones to pool heating.

- The Evergreen's sleek, modern design adds value to the home or property.
- Ease of programmability makes achieving comfort simple.
- For the homeowner who wants heating comfort while maintaining lower utility bills and reducing their carbon footprint, the Evergreen 220 and 299 boilers are recognized as Most Efficient by Energy Star® 2015 standards with an AFUE rating of 95%. This could qualify the homeowner for available local utility rebates, if available. The Evergreen provides a Low NOx of < 20 PPM, which adds to the greener environment sustainability.
- The high performance of the Evergreen boiler works seamlessly with the efficient and durable AHRI Certified™ Weil-McLain AquaPlus® Indirect Fired Water Heaters, available in five sizes to meet demanding hot water applications.

C-7783

*Federal tax credit available in qualifying areas

MULTIPLE BOILER SEQUENCING

The flexibility of the Evergreen boiler system reduces setup time and keeps costs down.

SERIES Sequencing	PARALLEL Sequencing	SMART Sequencing
← Higher Part-Load Efficiency →		
← Quicker Boiler Response Time →		
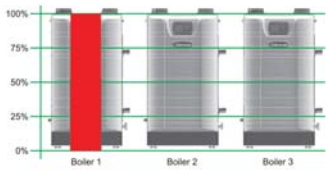	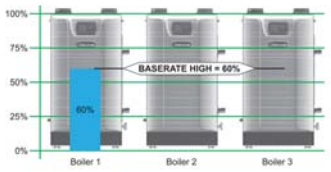	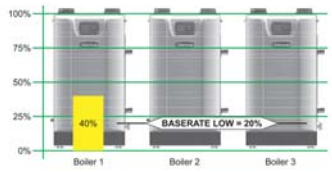
STAGE 1 – Lead boiler modulates up to a maximum of 100% before turning on the next boiler in the sequence. The STABILIZE TIME allows time for the boilers to modulate to meet system demand before turning on additional boilers.	STAGE 1 – Lead boiler modulates up to a maximum of Base Rate High before turning on the next boiler in the sequence. The STABILIZE TIME allows time for the boilers to modulate to meet system demand before turning on additional boilers.	STAGE 1 – Lead boiler modulates up to a low firing rate before turning on the next boiler in the sequence. The STABILIZE TIME allows time for the boilers to modulate to meet system demand before turning on additional boilers.
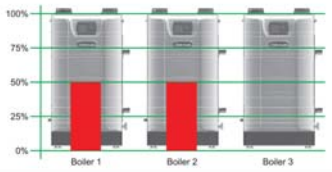	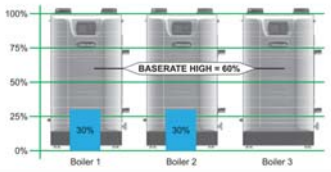	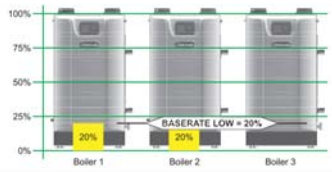
STAGE 2 – Boiler #2 in sequence ignites and both boilers modulate to so their combined energy output matches the energy output of Boiler #1 at 100%. After a short MOD DELAY TIME, the boilers will be released to modulate.	STAGE 2 – Boiler #2 in sequence ignites and both boilers modulate to so their combined energy output matches the energy output of Boiler #1 at Base Rate High. After a short MOD DELAY TIME, the boilers will be released to modulate.	STAGE 2 – Boiler #2 in sequence ignites and both boilers modulate to BASE RATE LOW. After a short MOD DELAY TIME, the boilers will be released to modulate.
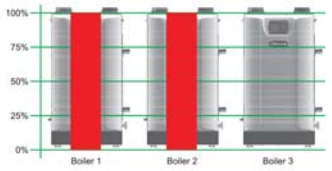	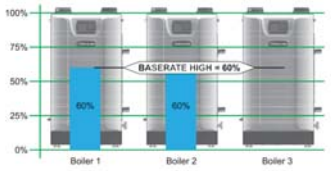	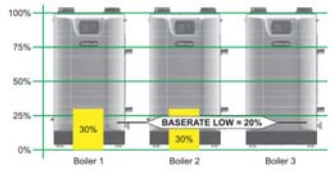
STAGE 3 – Both boilers modulate up to a maximum of 100% before turning on the next boiler in the sequence. The STABILIZE TIME allows time for the boilers to modulate to meet system demand before turning on additional boilers.	STAGE 3 – Both boilers modulate up to a maximum of Base Rate High before turning on the next boiler in the sequence. The STABILIZE TIME allows time for the boilers to modulate to meet system demand before turning on additional boilers.	STAGE 3 – Both boilers modulate up to a low firing rate before turning on the next boiler in the sequence. The STABILIZE TIME allows time for the boilers to modulate to meet system demand before turning on additional boilers.
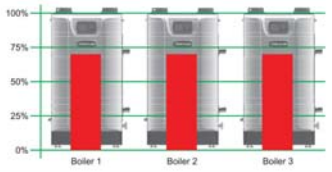	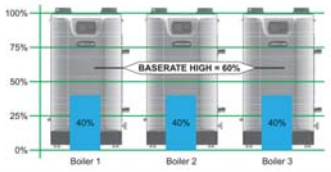	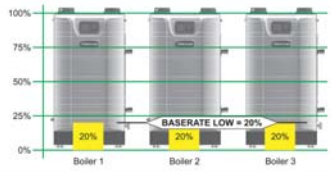
STAGE 4 – Boiler #3 in sequence ignites and then all boilers modulate to so their combined energy output matches the energy output of Boilers #1 and #2 at 100%. After a short MOD DELAY TIME, the boilers will be released to modulate.	STAGE 4 – Boiler #3 in sequence ignites and then all boilers modulate to so their combined energy output matches the energy output of Boilers #1 and #2 at Base Rate High. After a short MOD DELAY TIME, the boilers will be released to modulate.	STAGE 4 – Boiler #3 in sequence ignites and then all boilers modulate to BASE RATE LOW. After a short MOD DELAY TIME, the boilers will be released to modulate.
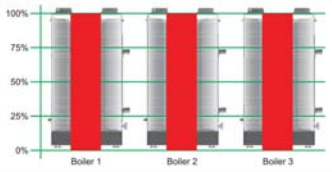	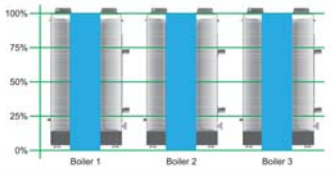	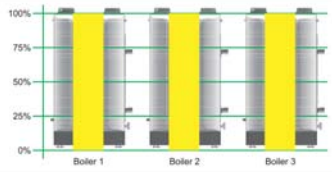
STAGE 5 – After all available boilers are firing, boilers are release to modulate up to 100% of rate.	STAGE 5 – After all available boilers are firing, boilers are release to modulate up to 100% of rate.	STAGE 5 – After all available boilers are firing, boilers are release to modulate up to 100% of rate.

THREE SELECTABLE SEQUENCING MODES TO CHOOSE FROM

- **Series Sequencing**
  Quickest- boiler goes to 100% before another boiler is turned on; output is achieved more quickly with less total burner hours
- **Parallel Sequencing**
  Efficiency and speed-based on Base Rate High; Hybrid mode between Smart and Series modes; boilers will go to user-programmed base rate high before turning on the next boiler
- **SmartSequencing™**
  Most efficient- maximizes part-load efficiency by turning on as many boilers as possible

PROGRAMMABLE PREFERENCES FOR MULTIPLE BOILER SETUPS

- **Multiple Boiler Sequencing**
  User selects what point one boiler stops modulating before turning on another boiler
- **Lead Lag Rotation**
  User selects which boiler turns on first and can choose based on burner hours, fixed rotation or no rotation
- **Input/Output Options**
  Input and outputs can be used for every boiler with up to 24 capable input/output pairs
- **Redundant Sensors**
  If one system supply or outdoor temperature sensor fails, there are backups. If backups fail, the system can still run on a special safety mode
- **Auxiliary Output Flexibility**
  Ability to control system circulators, combustion air dampers and/or other auxiliary system components

SIMPLE INTERFACE – COMPLEX CALCULATIONS

Straightforward, user-friendly design with advanced technology.

What's happening behind the scenes? Complex calculations of the required energy to meet system demands is distributed across all the boilers in the network.

System maximizes user's comfort by simultaneously meeting as many system demands as possible: When there are multiple requests on a cascaded boiler system, the control satisfies both local and network heating demands.

Setup is easy. The built-in wizard asks direct questions on setup, making customization easy and straightforward. Contextual help is also available on screen.

Visual Communication Screens

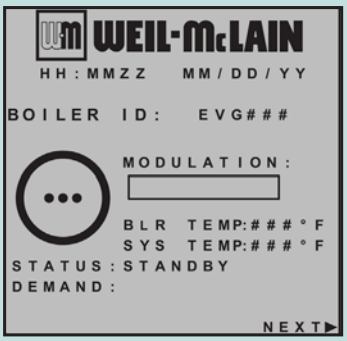

STANDBY

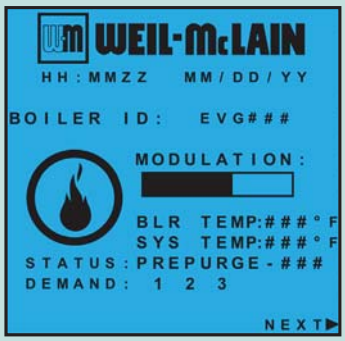

SPACE HEATING

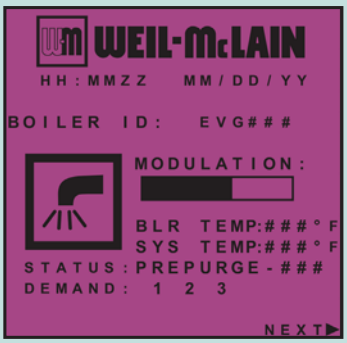

DHW HEATING

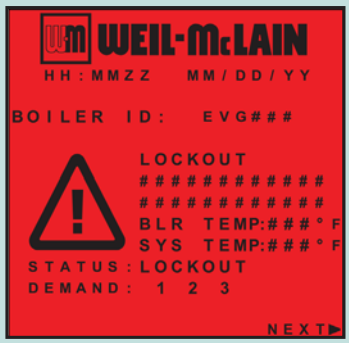

CHECK SYSTEM

*Model 220 and 299 only

FEATURES

BOILER

- Stainless steel fire-tube heat exchanger
- Non-metallic heat exchanger base
- Floor standing or wall-mount option with kit
- Natural or LP gas
- Negative regulated combustion
- 10 to 1 turndown ratio
- Boiler circulator
- Propane conversion kit
- Low water cut-off
- Sentinel X100 inhibitor and test kit
- Low NOx < 20 PPM

CONTROL FEATURES

- Easy installation with Setup Wizard
- Zone and/or priority based control
- Three thermostat Inputs
- Outdoor reset for each priority
- Rate adjustable per priority
- 0-10V input (modulation or setpoint)
- Four total outputs
  - 1 dedicated boiler circulator output
  - 3 additional outputs can be used with circulators, dampers, or system aux
- Aux inputs – flow switch or end switch
- Aux outputs – system pump or damper
- Modbus® connectivity
- Additional heat demand contact

BOILER CIRCULATORS

- 1-1/4" & 1-1/2" flanges (220/299) Taco 0014
- 1-1/4" & 1-1/2" flanges (399) Taco 0013

MULTIPLE BOILER FEATURES

- Up to 8 boilers, multiple system
- Series, Parallel, or SmartSequencing
- Lead boiler rotation
- 2 network priorities for the system
- 2 local priorities per boiler
- 24 zone inputs and outputs with 8 total cascaded boilers
- Aux inputs – flow switch or end switch
- System aux outputs – system pump or damper

VENTING*

- Direct vent 100 ft. for intake and 100 ft. for vent
- Dual pressure zones
- Common combustion air

**Please call your local Weil-McLain sales office for additional venting options.*

JACKET ASSEMBLY

- Easy maintenance with top access panel
- Fully removable jacket front door
- Adjustable boiler legs
- On/off power switch
- Line voltage service receptacle
- Mounting bracket ready for wall-mount kit
- Condensate trap

OPTIONAL EQUIPMENT

- Wall-mount kit
- Concentric vent kit
- Condensate neutralizer kit
- Sidewall vent/air termination kit
- Maintenance kits

220-399 MBH SPECIFICATIONS

MODEL	CSA INPUT (MBH)	DOE HEATING CAPACITY (MBH)	NET AHRI (MBH)	DOE AFUE	VENT MATERIAL	VENT SIZE	COMBUSTION AIR SIZE	VENTING LENGTH	MIN. RECOMMENDED PIPE SIZE	SUPPLY / RETURN TAPPING	GAS CONNECTION SIZE	APPROX. SHIP WEIGHT	WATER VOLUME
EVG 220	220	206	179	95.0%	PVC, CPVC, PP, SS (AL29-4C)	3" or 4"	3" or 4"	100'	1 1/4"	1 1/2"	3/4"	215 lbs.	4.6 Gal.
EVG 299	299	280	243	95.0%	PVC, CPVC, PP, SS (AL29-4C)	4"	4"	100'	1 1/2"	1 1/2"	3/4"	260 lbs.	7.0 Gal.
EVG 399	399	383*	333	96.5%*	PVC, CPVC, PP, SS (AL29-4C)	4"	4"	100'	1 1/2"	1 1/2"	3/4"	260 lbs.	6.7 Gal.

**Evergreen 399 ratings are gross output and combustion efficiency*

INNOVATIVE CONTROL SYSTEM FEATURES

- 3 programmable priorities for up to three heat inputs
- Text display for easy operation monitoring and diagnostics
- 0-10 VDC input modulation
- Additional heat demand contact for hybrid system
- Integrated low water protection
- Dual temperature sensors on boiler outlet and flue
- Blower speed modulation

Contact your local Weil-McLain sales office for more information.

NEW ENGLAND
250 Richmond Street
Raynham, MA 02767
TEL: 508-822-3939
FAX: 508-822-0553

NEW YORK METRO
220 White Plains Road
Suite 110
Tarrytown, NY 10591
TEL: 914-789-3777
FAX: 914-366-7407

MID-ATLANTIC
17000 Commerce Parkway
Suite B
Mount Laurel, NJ 08054
TEL: 856-866-7400
FAX: 856-866-8828

CENTRAL AND WESTERN SALES
999 McClintock Drive
Suite 200
Burr Ridge, IL 60527
TEL: 630-560-3738
FAX: 855-248-2777
Toll Free: 800-854-5482

ADMINISTRATIVE OFFICE
999 McClintock Drive
Suite 200
Burr Ridge, IL 60527
TEL: 630-560-3700
FAX: 630-560-3769

Weil-McLain® is a leading North American designer and manufacturer of hydronic comfort heating systems for residential, commercial and institutional buildings since 1881. Weil-McLain has manufacturing facilities in Michigan City, Indiana and Eden, North Carolina, along with regional sales offices throughout the United States and an administrative office in Burr Ridge, Illinois. Building on a reputation of quality and innovation, Weil-McLain is committed to creating Simplified Solutions for our Complex World™.

Architects, engineers, contractors, facility managers and homeowners alike rely on Weil-McLain for their comfort heating needs. Installed in homes, offices, schools, restaurants, hotels and other facilities throughout North America, the Weil-McLain brand is among the most respected and often used in the building industry.

Weil-McLain hydronic boilers and indirect-fired water heaters integrate the latest in advanced controls and materials including cast iron, stainless steel and aluminum heat exchanger technologies. The reliability and energy efficiency of our products has helped to make Weil-McLain industry leaders. Products are engineered with aesthetics, functionality, safety and structural tolerance in mind. By combining our expertise with the responsiveness of our support operations, we provide our customers with added value and peace of mind.

Appendix D – Street Lighting Inventory

Street Lighting GIS Map

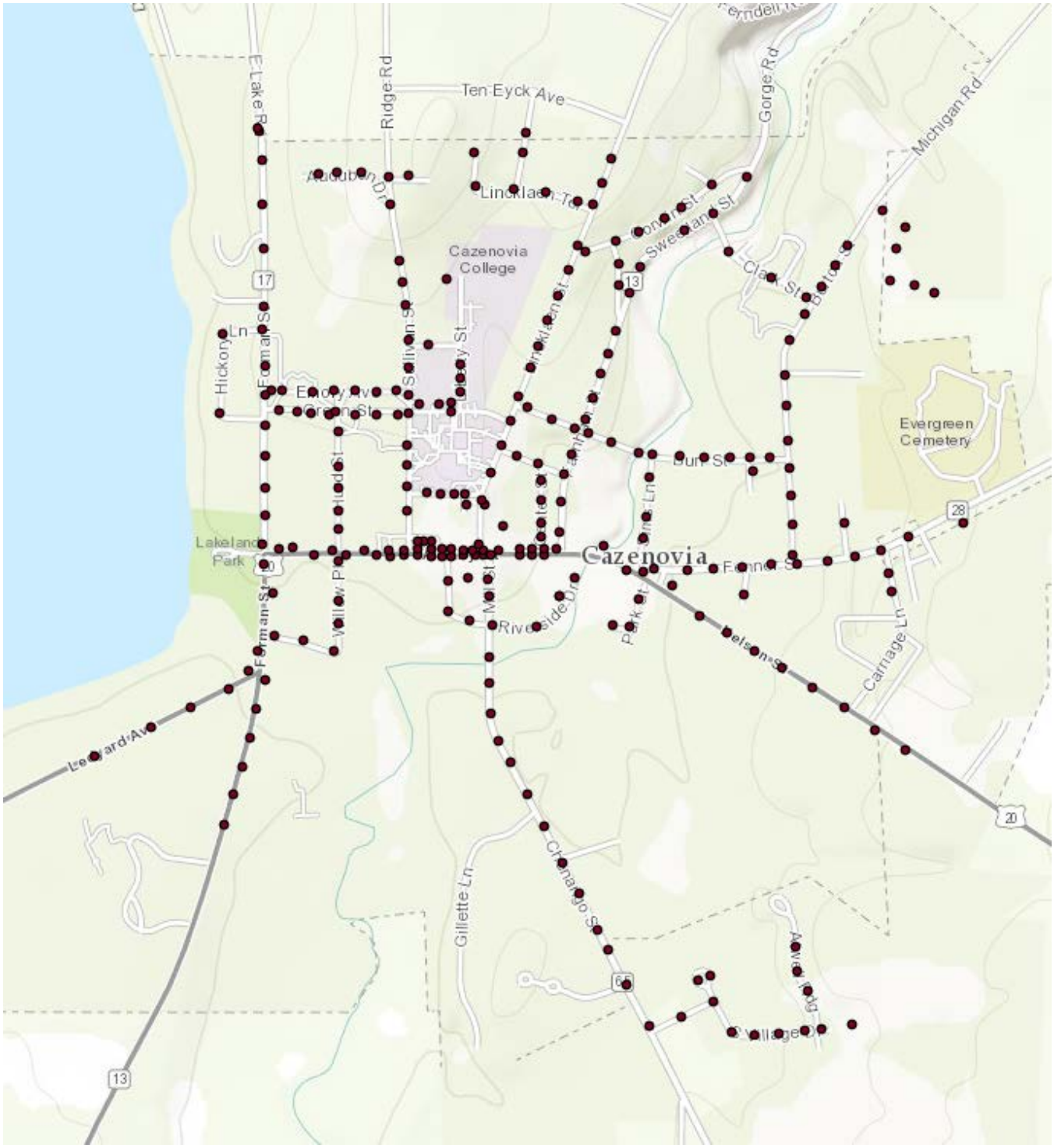

GIS Coordinates		Baseline					Proposed	
X	Y	National Grid Pole ID	Street Name	Equipment Description	Fixutre Type	Wattage	Proposed Fixture Model	Proposed Fixture Wattage
-75.8585	42.930012	83	Albany St	HPS Post Top	Williamsville	150	RPT-LEDSSEXT-4400LM-4000K	40
-75.8589	42.929971	83	Albany St	HPS Post Top	Williamsville	150	RPT-LEDSSEXT-4400LM-4000K	40
-75.8579	42.929861	84	Albany St	HPS Post Top	Williamsville	150	RPT-LEDSSEXT-4400LM-4000K	40
-75.8574	42.92996	85	Albany St	HPS Post Top	Williamsville	150	RPT-LEDSSEXT-4400LM-4000K	40
-75.857	42.929858	86	Albany St	HPS Post Top	Williamsville	150	RPT-LEDSSEXT-4400LM-4000K	40
-75.8565	42.929953	87	Albany St	HPS Post Top	Williamsville	150	RPT-LEDSSEXT-4400LM-4000K	40
-75.8561	42.929858	88	Albany St	HPS Post Top	Williamsville	150	RPT-LEDSSEXT-4400LM-4000K	40
-75.8557	42.929836	90	Albany St	HPS Post Top	Williamsville	150	RPT-LEDSSEXT-4400LM-4000K	40
-75.8558	42.929946	89	Albany St	HPS Post Top	Williamsville	150	RPT-LEDSSEXT-4400LM-4000K	40
-75.8554	42.929863	92	Albany St	HPS Post Top	Williamsville	150	RPT-LEDSSEXT-4400LM-4000K	40
-75.8554	42.92996	91	Albany St	HPS Post Top	Williamsville	150	RPT-LEDSSEXT-4400LM-4000K	40
-75.855	42.92984	94	Albany St	HPS Post Top	Williamsville	150	RPT-LEDSSEXT-4400LM-4000K	40
-75.855	42.929975	93	Albany St	HPS Post Top	Williamsville	150	RPT-LEDSSEXT-4400LM-4000K	40
-75.8546	42.929836	96	Albany St	HPS Post Top	Williamsville	150	RPT-LEDSSEXT-4400LM-4000K	40
-75.8546	42.929972	95	Albany St	HPS Post Top	Williamsville	150	RPT-LEDSSEXT-4400LM-4000K	40
-75.8546	42.930146	18	Albany St	HPS Post Top	Williamsville	150	RPT-LEDSSEXT-4400LM-4000K	40
-75.8548	42.930121	17	Albany St	HPS Post Top	Williamsville	150	RPT-LEDSSEXT-4400LM-4000K	40
-75.855	42.930122	16	Albany St	HPS Post Top	Williamsville	150	RPT-LEDSSEXT-4400LM-4000K	40
-75.8543	42.929829	98	Albany St	HPS Post Top	Williamsville	150	RPT-LEDSSEXT-4400LM-4000K	40
-75.8543	42.929965	97	Albany St	HPS Post Top	Williamsville	150	RPT-LEDSSEXT-4400LM-4000K	40
-75.854	42.929831	100	Albany St	HPS Post Top	Williamsville	150	RPT-LEDSSEXT-4400LM-4000K	40
-75.854	42.929971	99	Albany St	HPS Post Top	Williamsville	150	RPT-LEDSSEXT-4400LM-4000K	40
-75.8537	42.929851	102	Albany St	HPS Post Top	Williamsville	150	RPT-LEDSSEXT-4400LM-4000K	40
-75.8537	42.929953	19-1	Albany St	HPS Post Top	Williamsville	150	RPT-LEDSSEXT-4400LM-4000K	40
-75.8533	42.92986	no name	Albany St	HPS Post Top	Williamsville	150	RPT-LEDSSEXT-4400LM-4000K	40
-75.8534	42.929942	101	Albany St	HPS Post Top	Williamsville	150	RPT-LEDSSEXT-4400LM-4000K	40
-75.8531	42.92986	104	Albany St	HPS Post Top	Williamsville	150	RPT-LEDSSEXT-4400LM-4000K	40
-75.8531	42.929944	105	Albany St	HPS Post Top	Williamsville	150	RPT-LEDSSEXT-4400LM-4000K	40
-75.8529	42.929844	106	Albany St	HPS Post Top	Williamsville	150	RPT-LEDSSEXT-4400LM-4000K	40
-75.8527	42.929959	107	Albany St	HPS Post Top	Williamsville	150	RPT-LEDSSEXT-4400LM-4000K	40

GIS Coordinates		Baseline					Proposed	
X	Y	National Grid Pole ID	Street Name	Equipment Description	Fixutre Type	Wattage	Proposed Fixture Model	Proposed Fixture Wattage
-75.8521	42.929844	108	Albany St	HPS Post Top	Williamsville	150	RPT-LEDSSEXT-4400LM-4000K	40
-75.8521	42.929976	109	Albany St	HPS Post Top	Williamsville	150	RPT-LEDSSEXT-4400LM-4000K	40
-75.8518	42.929856	10	Albany St	HPS Post Top	Williamsville	150	RPT-LEDSSEXT-4400LM-4000K	40
-75.8517	42.929972	11	Albany St	HPS Post Top	Williamsville	150	RPT-LEDSSEXT-4400LM-4000K	40
-75.8514	42.929858	12	Albany St	HPS Post Top	Williamsville	150	RPT-LEDSSEXT-4400LM-4000K	40
-75.8514	42.929974	13	Albany St	HPS Post Top	Williamsville	150	RPT-LEDSSEXT-4400LM-4000K	40
-75.851	42.929991	15	Albany St	HPS Post Top	Williamsville	150	RPT-LEDSSEXT-4400LM-4000K	40
-75.8497	42.930036	1	Albany St	HPS Cobra Head	Roadway	250	ATBS I MVOLT R2 MP76 w Cobra	76
-75.8491	42.929536	1,1	Albany St	HPS Cobra Head	Roadway	250	ATBS I MVOLT R2 MP76 w Cobra	76
-75.8529	42.927203	L2	Albany St	HPS Cobra Head	Roadway	100	ATBS E MVOLT R2 MP 40w Cobra	40
-75.8529	42.927755	L1	Albany St	HPS Cobra Head	Roadway	100	ATBS E MVOLT R2 MP 40w Cobra	40
-75.853	42.929006	4	Albany St	HPS Cobra Head	Roadway	100	ATBS E MVOLT R2 MP 40w Cobra	40
-75.853	42.929335	2	Albany St	HPS Cobra Head	Roadway	100	ATBS E MVOLT R2 MP 40w Cobra	40
-75.8541	42.929325	1	ALLEN	HPS Cobra Head	Roadway	100	ATBS E MVOLT R2 MP 40w Cobra	40
-75.8541	42.9287	4	ALLEN	HPS Cobra Head	Roadway	100	ATBS E MVOLT R2 MP 40w Cobra	40
-75.8535	42.928496	10	ALLEN	HPS Cobra Head	Roadway	70	ATBS B MVOLT R2 MP 24w Cobra	24
-75.8566	42.937748	9537	AUDUBON	HPS Post Top	Traditional	100	RPT-LEDSSEXT-4400LM-4000K	40
-75.8572	42.937743	9539	AUDUBON	HPS Post Top	Traditional	100	RPT-LEDSSEXT-4400LM-4000K	40
-75.8577	42.937723	9538	AUDUBON	HPS Post Top	Traditional	100	RPT-LEDSSEXT-4400LM-4000K	40
-75.8536	42.92937	1	BENNETT	HPS Cobra Head	Roadway	100	ATBS E MVOLT R2 MP 40w Cobra	40
-75.8476	42.931881	9	BURR	HPS Cobra Head	Roadway	70	ATBS B MVOLT R2 MP 24w Cobra	24
-75.8469	42.93185	7	BURR	HPS Cobra Head	Roadway	70	ATBS B MVOLT R2 MP 24w Cobra	24
-75.8462	42.931858	5	BURR	HPS Cobra Head	Roadway	70	ATBS B MVOLT R2 MP 24w Cobra	24
-75.8456	42.931853	4	BURR	HPS Cobra Head	Roadway	70	ATBS B MVOLT R2 MP 24w Cobra	24
-75.8451	42.93186	2	BURR	HPS Cobra Head	Roadway	70	ATBS B MVOLT R2 MP 24w Cobra	24
-75.8484	42.93192	11	BURR	HPS Cobra Head	Roadway	70	ATBS B MVOLT R2 MP 24w Cobra	24
-75.8444	42.929853	1	BURTON	HPS Cobra Head	Roadway	70	ATBS B MVOLT R2 MP 24w Cobra	24
-75.8444	42.930474	3	BURTON	HPS Cobra Head	Roadway	70	ATBS B MVOLT R2 MP 24w Cobra	24
-75.8444	42.931068	5	BURTON	HPS Cobra Head	Roadway	70	ATBS B MVOLT R2 MP 24w Cobra	24
-75.8445	42.931638	7	BURTON	HPS Cobra Head	Roadway	100	ATBS E MVOLT R2 MP 40w Cobra	40

GIS Coordinates		Baseline					Proposed	
X	Y	National Grid Pole ID	Street Name	Equipment Description	Fixutre Type	Wattage	Proposed Fixture Model	Proposed Fixture Wattage
-75.8445	42.932211	9	BURTON	HPS Cobra Head	Roadway	70	ATBS B MVOLT R2 MP 24w Cobra	24
-75.8446	42.932919	11	BURTON	HPS Cobra Head	Roadway	70	ATBS B MVOLT R2 MP 24w Cobra	24
-75.8446	42.933569	13	BURTON	HPS Cobra Head	Roadway	70	ATBS B MVOLT R2 MP 24w Cobra	24
-75.8445	42.93428	15	BURTON	HPS Cobra Head	Roadway	70	ATBS B MVOLT R2 MP 24w Cobra	24
-75.844	42.93481	17	BURTON	HPS Cobra Head	Roadway	100	ATBS E MVOLT R2 MP 40w Cobra	40
-75.8436	42.935368	19	BURTON	HPS Cobra Head	Roadway	70	ATBS B MVOLT R2 MP 24w Cobra	24
-75.8432	42.935815	21	BURTON	HPS Cobra Head	Roadway	70	ATBS B MVOLT R2 MP 24w Cobra	24
-75.8429	42.936218	22	BURTON	HPS Cobra Head	Roadway	70	ATBS B MVOLT R2 MP 24w Cobra	24
-75.859	42.928185	1	CARPENTER	HPS Cobra Head	Roadway	100	ATBS E MVOLT R2 MP 40w Cobra	40
-75.8582	42.928091	3	CARPENTER	HPS Cobra Head	Roadway	70	ATBS B MVOLT R2 MP 24w Cobra	24
-75.8573	42.927871	5	CARPENTER	HPS Cobra Head	Roadway	70	ATBS B MVOLT R2 MP 24w Cobra	24
-75.8417	42.929483	19	CARRIAGE	HPS Cobra Head	Roadway	100	ATBS E MVOLT R2 MP 40w Cobra	40
-75.8416	42.929093	19-2	CARRIAGE	HPS Cobra Head	Roadway	100	ATBS E MVOLT R2 MP 40w Cobra	40
-75.8515	42.931406	4	CENTER	HPS Cobra Head	Roadway	70	ATBS B MVOLT R2 MP 24w Cobra	24
-75.8515	42.93098	3	CENTER	HPS Cobra Head	Roadway	70	ATBS B MVOLT R2 MP 24w Cobra	24
-75.8515	42.930508	2	CENTER	HPS Cobra Head	Roadway	70	ATBS B MVOLT R2 MP 24w Cobra	24
-75.8515	42.930238	1	CENTER	HPS Cobra Head	Roadway	70	ATBS B MVOLT R2 MP 24w Cobra	24
-75.8485	42.920128	29	CHENANGO	HPS Cobra Head	Roadway	70	ATBS B MVOLT R2 MP 24w Cobra	24
-75.8491	42.920989	27	CHENANGO	HPS Cobra Head	Roadway	70	ATBS B MVOLT R2 MP 24w Cobra	24
-75.8496	42.921711	24	CHENANGO	HPS Cobra Head	Roadway	70	ATBS B MVOLT R2 MP 24w Cobra	24
-75.8499	42.922136	23	CHENANGO	HPS Cobra Head	Roadway	70	ATBS B MVOLT R2 MP 24w Cobra	24
-75.8504	42.92289	21	CHENANGO	HPS Cobra Head	Roadway	70	ATBS B MVOLT R2 MP 24w Cobra	24
-75.8509	42.923513	19	CHENANGO	HPS Cobra Head	Roadway	70	ATBS B MVOLT R2 MP 24w Cobra	24
-75.8514	42.924265	17	CHENANGO	HPS Cobra Head	Roadway	70	ATBS B MVOLT R2 MP 24w Cobra	24
-75.8519	42.924914	15	CHENANGO	HPS Cobra Head	Roadway	70	ATBS B MVOLT R2 MP 24w Cobra	24
-75.8524	42.925585	13	CHENANGO	HPS Cobra Head	Roadway	70	ATBS B MVOLT R2 MP 24w Cobra	24
-75.8527	42.926024	8	CHENANGO	HPS Cobra Head	Roadway	70	ATBS B MVOLT R2 MP 24w Cobra	24
-75.8529	42.926581	6	CHENANGO	HPS Cobra Head	Roadway	70	ATBS B MVOLT R2 MP 24w Cobra	24
-75.844	42.93517	10	CLARK	HPS Cobra Head	Roadway	70	ATBS B MVOLT R2 MP 24w Cobra	24
-75.845	42.935586	8	CLARK	HPS Cobra Head	Roadway	70	ATBS B MVOLT R2 MP 24w Cobra	24

GIS Coordinates		Baseline					Proposed	
X	Y	National Grid Pole ID	Street Name	Equipment Description	Fixutre Type	Wattage	Proposed Fixture Model	Proposed Fixture Wattage
-75.8462	42.936098	5	CLARK	HPS Cobra Head	Roadway	70	ATBS B MVOLT R2 MP 24w Cobra	24
-75.8467	42.936889	3	CLARK	HPS Cobra Head	Roadway	70	ATBS B MVOLT R2 MP 24w Cobra	24
-75.8467	42.937493	2	CORWIN	HPS Cobra Head	Roadway	70	ATBS B MVOLT R2 MP 24w Cobra	24
-75.8475	42.937024	5	CORWIN	HPS Cobra Head	Roadway	70	ATBS B MVOLT R2 MP 24w Cobra	24
-75.848	42.936783	6	CORWIN	HPS Cobra Head	Roadway	100	ATBS E MVOLT R2 MP 40w Cobra	40
-75.8488	42.936505	9	CORWIN	HPS Cobra Head	Roadway	70	ATBS B MVOLT R2 MP 24w Cobra	24
-75.8494	42.93634	10	CORWIN	HPS Cobra Head	Roadway	70	ATBS B MVOLT R2 MP 24w Cobra	24
-75.8502	42.93612	12	CORWIN	HPS Cobra Head	Roadway	70	ATBS B MVOLT R2 MP 24w Cobra	24
-75.8419	42.936964	102	EMICK LN	HPS Post Top	AspenGrove	100	RPT-LEDSSEXT-4400LM-4000K	40
-75.8412	42.936608	107	EMICK LN	HPS Post Top	AspenGrove	100	RPT-LEDSSEXT-4400LM-4000K	40
-75.8415	42.93617	111	EMICK LN	HPS Post Top	AspenGrove	100	RPT-LEDSSEXT-4400LM-4000K	40
-75.8417	42.935495	120	EMICK LN	HPS Post Top	AspenGrove	100	RPT-LEDSSEXT-4400LM-4000K	40
-75.841	42.935416	129	EMICK LN	HPS Post Top	AspenGrove	100	RPT-LEDSSEXT-4400LM-4000K	40
-75.8404	42.935264	132	EMICK LN	HPS Post Top	AspenGrove	100	RPT-LEDSSEXT-4400LM-4000K	40
-75.8556	42.933236	1	EMORY	HPS Post Top	AspenGrove	100	RPT-LEDSSEXT-4400LM-4000K	40
-75.8561	42.933226	3	EMORY	HPS Post Top	AspenGrove	100	RPT-LEDSSEXT-4400LM-4000K	40
-75.8567	42.933243	5	EMORY	HPS Post Top	AspenGrove	100	RPT-LEDSSEXT-4400LM-4000K	40
-75.8573	42.933233	7	EMORY	HPS Post Top	AspenGrove	100	RPT-LEDSSEXT-4400LM-4000K	40
-75.8579	42.933218	9	EMORY	HPS Post Top	AspenGrove	100	RPT-LEDSSEXT-4400LM-4000K	40
-75.8588	42.933239	11	EMORY	HPS Post Top	AspenGrove	100	RPT-LEDSSEXT-4400LM-4000K	40
-75.8591	42.933239	13	EMORY	HPS Post Top	AspenGrove	100	RPT-LEDSSEXT-4400LM-4000K	40
-75.8589	42.932834	1	EMORY	HPS Post Top	CentralPark	100	RPT-LEDSSEXT-4400LM-4000K	40
-75.8583	42.932804	2	EMORY	HPS Post Top	CentralPark	100	RPT-LEDSSEXT-4400LM-4000K	40
-75.858	42.932789	3	EMORY	HPS Post Top	CentralPark	100	RPT-LEDSSEXT-4400LM-4000K	40
-75.8575	42.932733	4	EMORY	HPS Post Top	CentralPark	100	RPT-LEDSSEXT-4400LM-4000K	40
-75.8567	42.932748	5	EMORY	HPS Post Top	CentralPark	100	RPT-LEDSSEXT-4400LM-4000K	40
-75.8561	42.932731	6	EMORY	HPS Post Top	CentralPark	100	RPT-LEDSSEXT-4400LM-4000K	40
-75.8555	42.932728	7	EMORY	HPS Post Top	CentralPark	100	RPT-LEDSSEXT-4400LM-4000K	40
-75.8396	42.930501	13-2	EVERGREEN	HPS Cobra Head	Roadway	70	ATBS B MVOLT R2 MP 24w Cobra	24
-75.8496	42.933988	11	FARMHAM	HPS Cobra Head	Roadway	70	ATBS B MVOLT R2 MP 24w Cobra	24

GIS Coordinates		Baseline					Proposed	
X	Y	National Grid Pole ID	Street Name	Equipment Description	Fixutre Type	Wattage	Proposed Fixture Model	Proposed Fixture Wattage
-75.8498	42.933593	12	FARMHAM	HPS Cobra Head	Roadway	70	ATBS B MVOLT R2 MP 24w Cobra	24
-75.85	42.933081	13	FARMHAM	HPS Cobra Head	Roadway	70	ATBS B MVOLT R2 MP 24w Cobra	24
-75.8502	42.932656	14	FARMHAM	HPS Cobra Head	Roadway	70	ATBS B MVOLT R2 MP 24w Cobra	24
-75.8506	42.931928	16	FARMHAM	HPS Cobra Head	Roadway	70	ATBS B MVOLT R2 MP 24w Cobra	24
-75.8508	42.931511	17	FARMHAM	HPS Cobra Head	Roadway	70	ATBS B MVOLT R2 MP 24w Cobra	24
-75.8509	42.930963	19	FARMHAM	HPS Cobra Head	Roadway	70	ATBS B MVOLT R2 MP 24w Cobra	24
-75.851	42.930319	21	FARMHAM	HPS Cobra Head	Roadway	70	ATBS B MVOLT R2 MP 24w Cobra	24
-75.8483	42.929573	3	FENNER	HPS Cobra Head	Roadway	70	ATBS B MVOLT R2 MP 24w Cobra	24
-75.8474	42.929551	5	FENNER	HPS Cobra Head	Roadway	70	ATBS B MVOLT R2 MP 24w Cobra	24
-75.8466	42.929581	7	FENNER	HPS Cobra Head	Roadway	100	ATBS E MVOLT R2 MP 40w Cobra	40
-75.8458	42.929615	9	FENNER	HPS Cobra Head	Roadway	70	ATBS B MVOLT R2 MP 24w Cobra	24
-75.845	42.92965	11	FENNER	HPS Cobra Head	Roadway	70	ATBS B MVOLT R2 MP 24w Cobra	24
-75.8443	42.929678	13	FENNER	HPS Cobra Head	Roadway	100	ATBS E MVOLT R2 MP 40w Cobra	40
-75.8434	42.929733	15	FENNER	HPS Cobra Head	Roadway	100	ATBS E MVOLT R2 MP 40w Cobra	40
-75.8426	42.929833	17	FENNER	HPS Cobra Head	Roadway	100	ATBS E MVOLT R2 MP 40w Cobra	40
-75.8419	42.929953	19	FENNER	HPS Cobra Head	Roadway	100	ATBS E MVOLT R2 MP 40w Cobra	40
-75.8411	42.93024	21	FENNER	HPS Cobra Head	Roadway	100	ATBS E MVOLT R2 MP 40w Cobra	40
-75.8458	42.929035	9,2	FENNER	HPS Cobra Head	Roadway	70	ATBS B MVOLT R2 MP 24w Cobra	24
-75.8594	42.938591	193	FORMAN	HPS Cobra Head	Roadway	70	ATBS B MVOLT R2 MP 24w Cobra	24
-75.8594	42.937995	195	FORMAN	HPS Cobra Head	Roadway	70	ATBS B MVOLT R2 MP 24w Cobra	24
-75.8593	42.937071	198	FORMAN	HPS Cobra Head	Roadway	70	ATBS B MVOLT R2 MP 24w Cobra	24
-75.8593	42.936168	200	FORMAN	HPS Cobra Head	Roadway	70	ATBS B MVOLT R2 MP 24w Cobra	24
-75.8593	42.934964	202	FORMAN	HPS Cobra Head	Roadway	70	ATBS B MVOLT R2 MP 24w Cobra	24
-75.8593	42.934499	204	FORMAN	HPS Cobra Head	Roadway	70	ATBS B MVOLT R2 MP 24w Cobra	24
-75.8605	42.934411	208	FORMAN	HPS Cobra Head	Roadway	70	ATBS B MVOLT R2 MP 24w Cobra	24
-75.8605	42.932786	206	FORMAN	HPS Cobra Head	Roadway	70	ATBS B MVOLT R2 MP 24w Cobra	24
-75.8593	42.933146	212	FORMAN	HPS Cobra Head	Roadway	70	ATBS B MVOLT R2 MP 24w Cobra	24
-75.8593	42.933758	0	FORMAN	HPS Cobra Head	Roadway	70	ATBS B MVOLT R2 MP 24w Cobra	24
-75.8593	42.930678	0	FORMAN	HPS Cobra Head	Roadway	70	ATBS B MVOLT R2 MP 24w Cobra	24
-75.8593	42.931241	9	FORMAN	HPS Cobra Head	Roadway	70	ATBS B MVOLT R2 MP 24w Cobra	24

GIS Coordinates		Baseline					Proposed	
X	Y	National Grid Pole ID	Street Name	Equipment Description	Fixutre Type	Wattage	Proposed Fixture Model	Proposed Fixture Wattage
-75.8593	42.931883	214	FORMAN	HPS Cobra Head	Roadway	250	ATBS I MVOLT R2 MP76 w Cobra	76
-75.8593	42.932531	215	FORMAN	HPS Cobra Head	Roadway	250	ATBS I MVOLT R2 MP76 w Cobra	76
-75.8593	42.930085	216	FORMAN	HPS Cobra Head	Roadway	250	ATBS I MVOLT R2 MP76 w Cobra	76
-75.8593	42.929663	219	FORMAN	HPS Cobra Head	Roadway	250	ATBS I MVOLT R2 MP76 w Cobra	76
-75.8591	42.929083	4	HICKORY	HPS Cobra Head	Roadway	70	ATBS B MVOLT R2 MP 24w Cobra	24
-75.8595	42.927885	8	HICKORY	HPS Cobra Head	Roadway	70	ATBS B MVOLT R2 MP 24w Cobra	24
-75.8572	42.930391	1	HURD	HPS Cobra Head	Roadway	70	ATBS B MVOLT R2 MP 24w Cobra	24
-75.8572	42.930766	2	HURD	HPS Cobra Head	Roadway	70	ATBS B MVOLT R2 MP 24w Cobra	24
-75.8572	42.931221	3	HURD	HPS Cobra Head	Roadway	70	ATBS B MVOLT R2 MP 24w Cobra	24
-75.8572	42.931688	4	HURD	HPS Cobra Head	Roadway	70	ATBS B MVOLT R2 MP 24w Cobra	24
-75.8572	42.932386	6	HURD	HPS Cobra Head	Roadway	70	ATBS B MVOLT R2 MP 24w Cobra	24
-75.8573	42.9328	7	HURD	HPS Cobra Head	Roadway	70	ATBS B MVOLT R2 MP 24w Cobra	24
-75.8536	42.930904	1	JAILHOUSE	HPS Cobra Head	Roadway	70	ATBS B MVOLT R2 MP 24w Cobra	24
-75.8641	42.925718	8	LEDYARD	HPS Cobra Head	Roadway	250	ATBS I MVOLT R2 MP76 w Cobra	76
-75.8625	42.926291	6	LEDYARD	HPS Cobra Head	Roadway	250	ATBS I MVOLT R2 MP76 w Cobra	76
-75.8613	42.926711	4	LEDYARD	HPS Cobra Head	Roadway	250	ATBS I MVOLT R2 MP76 w Cobra	76
-75.8603	42.927091	2	LEDYARD	HPS Cobra Head	Roadway	250	ATBS I MVOLT R2 MP76 w Cobra	76
-75.8597	42.927458	1	LEDYARD	HPS Cobra Head	Roadway	250	ATBS I MVOLT R2 MP76 w Cobra	76
-75.8592	42.927272	1,1	LEDYARD	HPS Cobra Head	Roadway	250	ATBS I MVOLT R2 MP76 w Cobra	76
-75.8538	42.933204	2	LIBERTY ST	HPS Cobra Head	Roadway	70	ATBS B MVOLT R2 MP 24w Cobra	24
-75.8538	42.933495	3	LIBERTY ST	HPS Cobra Head	Roadway	70	ATBS B MVOLT R2 MP 24w Cobra	24
-75.8538	42.933775	1	LIBERTY ST	HPS Cobra Head	Roadway	70	ATBS B MVOLT R2 MP 24w Cobra	24
-75.8533	42.93745	9	LINCKAEN DRIVE	HPS Cobra Head	Roadway	70	ATBS B MVOLT R2 MP 24w Cobra	24
-75.8534	42.938143	7	LINCKAEN DRIVE	HPS Cobra Head	Roadway	70	ATBS B MVOLT R2 MP 24w Cobra	24
-75.8495	42.938011	12	LINCKAEN ST	HPS Cobra Head	Roadway	70	ATBS B MVOLT R2 MP 24w Cobra	24
-75.8498	42.937516	10	LINCKAEN ST	HPS Cobra Head	Roadway	70	ATBS B MVOLT R2 MP 24w Cobra	24
-75.85	42.93707	8	LINCKAEN ST	HPS Cobra Head	Roadway	70	ATBS B MVOLT R2 MP 24w Cobra	24
-75.8505	42.936223	6H	LINCKAEN ST	HPS Cobra Head	Roadway	70	ATBS B MVOLT R2 MP 24w Cobra	24
-75.8507	42.935729	5h	LINCKAEN ST	HPS Cobra Head	Roadway	70	ATBS B MVOLT R2 MP 24w Cobra	24
-75.851	42.935201	4H	LINCKAEN ST	HPS Cobra Head	Roadway	70	ATBS B MVOLT R2 MP 24w Cobra	24

GIS Coordinates		Baseline					Proposed	
X	Y	National Grid Pole ID	Street Name	Equipment Description	Fixutre Type	Wattage	Proposed Fixture Model	Proposed Fixture Wattage
-75.8513	42.934679	3H	LINCKAEN ST	HPS Cobra Head	Roadway	70	ATBS B MVOLT R2 MP 24w Cobra	24
-75.8516	42.934154	2H	LINCKAEN ST	HPS Cobra Head	Roadway	70	ATBS B MVOLT R2 MP 24w Cobra	24
-75.8518	42.93371	1H	LINCKAEN ST	HPS Cobra Head	Roadway	70	ATBS B MVOLT R2 MP 24w Cobra	24
-75.8521	42.933134	H	LINCKAEN ST	HPS Cobra Head	Roadway	70	ATBS B MVOLT R2 MP 24w Cobra	24
-75.8523	42.932621	6	LINCKAEN ST	HPS Post Top	Traditional	100	RPT-LEDSSEXT-4400LM-4000K	40
-75.8526	42.932106	5	LINCKAEN ST	HPS Post Top	Traditional	100	RPT-LEDSSEXT-4400LM-4000K	40
-75.8529	42.931558	4	LINCKAEN ST	HPS Cobra Head	Roadway	100	ATBS E MVOLT R2 MP 40w Cobra	40
-75.8533	42.93008	3	LINCKAEN ST	HPS Cobra Head	Roadway	100	ATBS E MVOLT R2 MP 40w Cobra	40
-75.8531	42.930892	4	LINCKAEN ST	HPS Post Top	Traditional	100	RPT-LEDSSEXT-4400LM-4000K	40
-75.8532	42.930996	3	LINCKAEN ST	HPS Post Top	Traditional	100	RPT-LEDSSEXT-4400LM-4000K	40
-75.8536	42.931101	4	LINCKAEN ST	HPS Post Top	Traditional	100	RPT-LEDSSEXT-4400LM-4000K	40
-75.8539	42.931107	3	LINCKAEN ST	HPS Post Top	Traditional	100	RPT-LEDSSEXT-4400LM-4000K	40
-75.8543	42.931118	2	LINCKAEN ST	HPS Post Top	Traditional	100	RPT-LEDSSEXT-4400LM-4000K	40
-75.8547	42.931136	1	LINCKAEN ST	HPS Post Top	Traditional	100	RPT-LEDSSEXT-4400LM-4000K	40
-75.8523	42.937396		LINCKAEN TERRACE	HPS Cobra Head	Roadway	70	ATBS B MVOLT R2 MP 24w Cobra	24
-75.8514	42.937341	3	LINCKAEN TERRACE	HPS Cobra Head	Roadway	70	ATBS B MVOLT R2 MP 24w Cobra	24
-75.8505	42.937128	1	LINCKAEN TERRACE	HPS Cobra Head	Roadway	100	ATBS E MVOLT R2 MP 40w Cobra	40
-75.8522	42.931901	4	LYMAN	HPS Cobra Head	Roadway	70	ATBS B MVOLT R2 MP 24w Cobra	24
-75.8516	42.931736	2	LYMAN	HPS Cobra Head	Roadway	70	ATBS B MVOLT R2 MP 24w Cobra	24
-75.8455	42.931569	4,2	MYRTLE	HPS Cobra Head	Roadway	70	ATBS B MVOLT R2 MP 24w Cobra	24
-75.8429	42.930504	2	NAOMI	HPS Cobra Head	Roadway	70	ATBS B MVOLT R2 MP 24w Cobra	24
-75.8486	42.929514	2-A	NELSON	HPS Cobra Head	Roadway	250	ATBS I MVOLT R2 MP76 w Cobra	76
-75.8478	42.929239	N/A	NELSON	HPS Cobra Head	Roadway	250	ATBS I MVOLT R2 MP76 w Cobra	76
-75.847	42.928594	N/A	NELSON	HPS Cobra Head	Roadway	100	ATBS E MVOLT R2 MP 40w Cobra	40
-75.8463	42.92824	N/A	NELSON	HPS Post Top	Traditional	100	RPT-LEDSSEXT-4400LM-4000K	40
-75.8455	42.927885	N/A	NELSON	HPS Post Top	Traditional	100	RPT-LEDSSEXT-4400LM-4000K	40
-75.8447	42.927518	N/A	NELSON	HPS Post Top	Traditional	100	RPT-LEDSSEXT-4400LM-4000K	40
-75.8439	42.927116	N/A	NELSON	HPS Post Top	Traditional	100	RPT-LEDSSEXT-4400LM-4000K	40
-75.843	42.926695	N/A	NELSON	HPS Post Top	Traditional	100	RPT-LEDSSEXT-4400LM-4000K	40
-75.8421	42.926238	N/A	NELSON	HPS Cobra Head	Roadway	250	ATBS I MVOLT R2 MP76 w Cobra	76

GIS Coordinates		Baseline					Proposed	
X	Y	National Grid Pole ID	Street Name	Equipment Description	Fixutre Type	Wattage	Proposed Fixture Model	Proposed Fixture Wattage
-75.8412	42.92583	N/A	NELSON	HPS Cobra Head	Roadway	250	ATBS I MVOLT R2 MP76 w Cobra	76
-75.854	42.932813	1	NICKERSON	HPS Cobra Head	Roadway	70	ATBS B MVOLT R2 MP 24w Cobra	24
-75.8549	42.93295	1	NICKERSON	HPS Cobra Head	Roadway	70	ATBS B MVOLT R2 MP 24w Cobra	24
-75.8544	42.932972	3	NICKERSON	HPS Cobra Head	Roadway	70	ATBS B MVOLT R2 MP 24w Cobra	24
-75.854	42.932987	5	NICKERSON	HPS Cobra Head	Roadway	70	ATBS B MVOLT R2 MP 24w Cobra	24
-75.853	42.932959	7	NICKERSON	HPS Cobra Head	Roadway	70	ATBS B MVOLT R2 MP 24w Cobra	24
-75.8526	42.930465	H	OPERA HOUSE	HPS Cobra Head	Roadway	100	ATBS E MVOLT R2 MP 40w Cobra	40
-75.8487	42.92895	2	PARK	HPS Cobra Head	Roadway	70	ATBS B MVOLT R2 MP 24w Cobra	24
-75.849	42.928368	4	PARK	HPS Cobra Head	Roadway	70	ATBS B MVOLT R2 MP 24w Cobra	24
-75.8495	42.928405	1	PARK	HPS Cobra Head	Roadway	70	ATBS B MVOLT R2 MP 24w Cobra	24
-75.8552	42.937675	12,2	PINE	HPS Cobra Head	Roadway	100	ATBS E MVOLT R2 MP 40w Cobra	40
-75.8604	42.924296	12	RIPPLETON	HPS Cobra Head	Roadway	100	ATBS E MVOLT R2 MP 40w Cobra	40
-75.8601	42.924921	10	RIPPLETON	HPS Cobra Head	Roadway	100	ATBS E MVOLT R2 MP 40w Cobra	40
-75.8599	42.925481	8	RIPPLETON	HPS Cobra Head	Roadway	100	ATBS E MVOLT R2 MP 40w Cobra	40
-75.8597	42.92609	6	RIPPLETON	HPS Cobra Head	Roadway	100	ATBS E MVOLT R2 MP 40w Cobra	40
-75.8595	42.926681	4	RIPPLETON	HPS Cobra Head	Roadway	100	ATBS E MVOLT R2 MP 40w Cobra	40
-75.8516	42.928378	6	RIVERSIDE	HPS Cobra Head	Roadway	70	ATBS B MVOLT R2 MP 24w Cobra	24
-75.851	42.929001	5,1	RIVERSIDE	HPS Cobra Head	Roadway	250	ATBS I MVOLT R2 MP76 w Cobra	76
-75.851	42.929001	5,1	RIVERSIDE	HPS Cobra Head	Roadway	100	ATBS E MVOLT R2 MP 40w Cobra	40
-75.8506	42.929381	5,2	RIVERSIDE	HPS Post Top	Traditional	100	RPT-LEDSSEXT-4400LM-4000K	40
-75.8529	42.928415	9	RIVERSIDE	HPS Cobra Head	Roadway	70	ATBS B MVOLT R2 MP 24w Cobra	24
-75.8485	42.931458	11,2	SIMS	HPS Cobra Head	Roadway	70	ATBS B MVOLT R2 MP 24w Cobra	24
-75.8485	42.930653	11,4	SIMS	HPS Cobra Head	Roadway	70	ATBS B MVOLT R2 MP 24w Cobra	24
-75.8486	42.930193	11,5	SIMS	HPS Cobra Head	Roadway	70	ATBS B MVOLT R2 MP 24w Cobra	24
-75.8559	42.938403	14	SULLIVAN	HPS Cobra Head	Roadway	70	ATBS B MVOLT R2 MP 24w Cobra	24
-75.8558	42.937651	12	SULLIVAN	HPS Cobra Head	Roadway	70	ATBS B MVOLT R2 MP 24w Cobra	24
-75.8557	42.937076	10	SULLIVAN	HPS Cobra Head	Roadway	70	ATBS B MVOLT R2 MP 24w Cobra	24
-75.8541	42.935534	9	SULLIVAN	HPS Cobra Head	Roadway	100	ATBS E MVOLT R2 MP 40w Cobra	40
-75.8555	42.935926	8	SULLIVAN	HPS Cobra Head	Roadway	70	ATBS B MVOLT R2 MP 24w Cobra	24
-75.8554	42.935485	7	SULLIVAN	HPS Cobra Head	Roadway	70	ATBS B MVOLT R2 MP 24w Cobra	24

GIS Coordinates		Baseline					Proposed	
X	Y	National Grid Pole ID	Street Name	Equipment Description	Fixutre Type	Wattage	Proposed Fixture Model	Proposed Fixture Wattage
-75.8553	42.935015	6	SULLIVAN	HPS Cobra Head	Roadway	70	ATBS B MVOLT R2 MP 24w Cobra	24
-75.8552	42.93428	6	SULLIVAN	HPS Cobra Head	Roadway	250	ATBS I MVOLT R2 MP76 w Cobra	76
-75.8552	42.933723	8	SULLIVAN	HPS Cobra Head	Roadway	100	ATBS E MVOLT R2 MP 40w Cobra	40
-75.8552	42.933148	7	SULLIVAN	HPS Post Top	Traditional	100	RPT-LEDSSEXT-4400LM-4000K	40
-75.8552	42.93276	6	SULLIVAN	HPS Post Top	Traditional	100	RPT-LEDSSEXT-4400LM-4000K	40
-75.8553	42.932126	5	SULLIVAN	HPS Post Top	Traditional	100	RPT-LEDSSEXT-4400LM-4000K	40
-75.8553	42.9317	4	SULLIVAN	HPS Post Top	Traditional	100	RPT-LEDSSEXT-4400LM-4000K	40
-75.8553	42.931263	3	SULLIVAN	HPS Post Top	Traditional	100	RPT-LEDSSEXT-4400LM-4000K	40
-75.8553	42.93076	2	SULLIVAN	HPS Post Top	Traditional	100	RPT-LEDSSEXT-4400LM-4000K	40
-75.8457	42.937635	2	SWEETLAND	HPS Cobra Head	Roadway	70	ATBS B MVOLT R2 MP 24w Cobra	24
-75.849	42.935248	8	SWEETLAND	HPS Cobra Head	Roadway	70	ATBS B MVOLT R2 MP 24w Cobra	24
-75.8487	42.935804	7	SWEETLAND	HPS Cobra Head	Roadway	70	ATBS B MVOLT R2 MP 24w Cobra	24
-75.8475	42.936558	5	SWEETLAND	HPS Cobra Head	Roadway	70	ATBS B MVOLT R2 MP 24w Cobra	24
-75.8494	42.934486	10	SWEETLAND	HPS Cobra Head	Roadway	70	ATBS B MVOLT R2 MP 24w Cobra	24
-75.8519	42.938571	2	TENEYCK	HPS Cobra Head	Roadway	100	ATBS E MVOLT R2 MP 40w Cobra	40
-75.852	42.938156	3	TENEYCK	HPS Cobra Head	Roadway	100	ATBS E MVOLT R2 MP 40w Cobra	40
-75.8547	42.934178	2	UNION	HPS Cobra Head	Roadway	70	ATBS B MVOLT R2 MP 24w Cobra	24
-75.8493	42.935841	12,2	UPPERFARMHAM	HPS Cobra Head	Roadway	70	ATBS B MVOLT R2 MP 24w Cobra	24
-75.8493	42.935429	12,1	UPPERFARMHAM	HPS Cobra Head	Roadway	70	ATBS B MVOLT R2 MP 24w Cobra	24
-75.8476	42.920321	2202	VILLAGE	HPS Post Top	Traditional	100	RPT-LEDSSEXT-4400LM-4000K	40
-75.8467	42.921186	2204	VILLAGE	HPS Post Top	Traditional	100	RPT-LEDSSEXT-4400LM-4000K	40
-75.8471	42.921086	2203	VILLAGE	HPS Post Top	Traditional	100	RPT-LEDSSEXT-4400LM-4000K	40
-75.8466	42.920648	2205	VILLAGE	HPS Post Top	Traditional	100	RPT-LEDSSEXT-4400LM-4000K	40
-75.8461	42.920031	2206	VILLAGE	HPS Post Top	Traditional	100	RPT-LEDSSEXT-4400LM-4000K	40
-75.8455	42.91995	2569	VILLAGE	HPS Post Top	Traditional	100	RPT-LEDSSEXT-4400LM-4000K	40
-75.8448	42.919993	2570	VILLAGE	HPS Post Top	Traditional	100	RPT-LEDSSEXT-4400LM-4000K	40
-75.8441	42.920036	2571	VILLAGE	HPS Post Top	Traditional	100	RPT-LEDSSEXT-4400LM-4000K	40
-75.8436	42.920093	2572	VILLAGE	HPS Post Top	Traditional	100	RPT-LEDSSEXT-4400LM-4000K	40
-75.8427	42.920186	38	VILLAGE	HPS Post Top	Traditional	100	RPT-LEDSSEXT-4400LM-4000K	40
-75.844	42.920874	1	VILLAGE	HPS Post Top	Traditional	100	RPT-LEDSSEXT-4400LM-4000K	40

GIS Coordinates		Baseline					Proposed	
X	Y	National Grid Pole ID	Street Name	Equipment Description	Fixutre Type	Wattage	Proposed Fixture Model	Proposed Fixture Wattage
-75.8443	42.921275	5	VILLAGE	HPS Post Top	Traditional	100	RPT-LEDSSEXT-4400LM-4000K	40
-75.8443	42.921769	9	VILLAGE	HPS Post Top	Traditional	100	RPT-LEDSSEXT-4400LM-4000K	40
-75.8519	42.932905	21	WILLIAMS	HPS Post Top	Traditional	100	RPT-LEDSSEXT-4400LM-4000K	40
-75.8512	42.932645	19	WILLIAMS	HPS Cobra Head	Roadway	70	ATBS B MVOLT R2 MP 24w Cobra	24
-75.8506	42.932475	17	WILLIAMS	HPS Cobra Head	Roadway	70	ATBS B MVOLT R2 MP 24w Cobra	24
-75.8501	42.932359	16	WILLIAMS	HPS Cobra Head	Roadway	70	ATBS B MVOLT R2 MP 24w Cobra	24
-75.8495	42.932185	14	WILLIAMS	HPS Cobra Head	Roadway	70	ATBS B MVOLT R2 MP 24w Cobra	24
-75.8487	42.931971	12	WILLIAMS	HPS Cobra Head	Roadway	70	ATBS B MVOLT R2 MP 24w Cobra	24
-75.8572	42.928439	2	WILLOW	HPS Cobra Head	Roadway	70	ATBS B MVOLT R2 MP 24w Cobra	24
-75.8572	42.92892	3	WILLOW	HPS Cobra Head	Roadway	70	ATBS B MVOLT R2 MP 24w Cobra	24
-75.8572	42.929723	5	WILLOW	HPS Cobra Head	Roadway	70	ATBS B MVOLT R2 MP 24w Cobra	24

Appendix E – National Grid Street Lighting Tariff

Received: 01/31/2011
Status: EFFECTIVE
Effective Date: 02/01/2011

PSC NO: 214
Superseding P.S.C. No. 213

NIAGARA MOHAWK POWER CORPORATION

d/b/a NATIONAL GRID

SCHEDULE

FOR

ELECTRIC SERVICE

STREET, HIGHWAY, ROADWAY
AND OTHER OUTDOOR LIGHTING

APPLICABLE

IN

ALL TERRITORY SERVED BY COMPANY

For detail description of Territory, see General Information Leaf, Paragraph I

Subsequent changes will be effective as shown on individual leaves.

Issued by Thomas B. King, President, Syracuse, NY

Received: 02/24/2012
Status: EFFECTIVE
Effective Date: 05/21/2012

TABLE OF CONTENTS

Received: 02/24/2012
Status: EFFECTIVE
Effective Date: 05/21/2012

TABLE OF CONTENTS

Received: 02/24/2012
Status: EFFECTIVE
Effective Date: 05/21/2012

TABLE OF CONTENTS

SERVICE CLASSIFICATIONS — Leaf No.

Received: 02/24/2012
Status: EFFECTIVE
Effective Date: 05/21/2012

GENERAL INFORMATION

I. TERRITORY TO WHICH SCHEDULE APPLIES

Entire territory served by Company as more fully described in the Company's SCHEDULE FOR ELECTRIC SERVICE (Electric Tariff) as amended from time to time.

II. RULES AND REGULATIONS

Subject to such limitations, reservations, or exceptions as are set forth in the service classifications (as such limitations, reservations, or exceptions may from time to time be amended) the uniform rules and regulations contained in the Electric Tariff shall be applicable to this Schedule.

III. TERMINOLOGY DEFINITIONS AND ABBREVIATIONS

Aluminum (AL) – A metallic, conductive material used to produce structural support components which have a moderate strength, are lighter in weight and require less maintenance as compared to steel or iron products.

American National Standards Institute (ANSI) – Typical reference is made to ANSI C136 (American National Standard for Roadway and Area Lighting Equipment).

Anchor Base (AB) – The mechanical connection between a base plate of a lighting standard and an applicable foundation through the use of galvanized steel anchor bolts.

Arm (AR) – A metallic or composite facility, attached to a compatible standard, used to support the luminaire in a placement away from the standard shaft to achieve greater desired illumination value, to facilitate multiple luminaires or to provide an aesthetic character.

Assembly – A general reference to the composition of various individual facilities and/or equipment to create a complete, operational outdoor light consisting of an appropriate lighting source, optical system, operational control, support structure and electrical supply/source. The reference is also used relative to the composition of individual elements, components or devices to create an operational facility.

Attachment (AT) – A general reference to a device or other equipment not required of, or affiliated with, the specific lighting components, which may be affixed to the lighting structure or electrically sourced from the lighting circuitry. These attachments are to be compliant with and administered through terms and conditions established within company licenses or other contract agreements.

Backbill – A "Backbill" is that portion of any bill, other than a levelized bill, which represents charges not previously billed for service that was actually delivered to the customer during a period before the current billing cycle.

Base (BS) – A metallic or composite facility placed at the bottom of a standard which can either mount to the foundation as a support for the standard, often acting as a breakaway (frangible) safety feature, or be installed independently of the standard as a decorative skirt or shroud.

Bracket (BK) – A metallic facility, attached to a wood pole, used to support the luminaire in a placement away from the pole to achieve greater desired illumination value, to facilitate multiple luminaires or to provide an aesthetic character.

Received: 01/31/2011
Status: EFFECTIVE
Effective Date: 02/01/2011

GENERAL INFORMATION

III. TERMINOLOGY DEFINITIONS AND ABBREVIATIONS

Cable (CBL) – The typical reference to an underground electrical wire having the proper wire size, material and configuration to meet the service requirements to be provided for and the appropriate protective, nonconductive insulation jacket.

Cast-In-Place (CIP) – A general construction method referring to an on-site constructed concrete foundation.

Cast Iron or Iron (CI) – A conductive metallic material used to produce rigid, high strength, structural components which requires a surface coating to minimize oxidation, attains a significant weight and are susceptible to failure when directly impacted.

Circuit (CR) – The underground cable or overhead conductor which if installed to provide electrical service to the private or street lights or traffic control devices.

Concrete (Conc)– A semi-conductive composite material comprised of granular aggregate, sand, cement, additives and water to produce high strength, rigid, structural components when combined with reinforcing steel which can attain a significant weight.

Conductor – The typical reference to an aerial electrical wire having the proper wire size, material and configuration to meet the service requirements to be provided for and the appropriate insulation jacket as necessary.

Conduit (CNDT) – The reference to a metallic or nonmetallic pipe installed underground and used specifically to provide an unimpeded conveyance path or route for electric cables between two locations.

Decorative (DEC, DC) – A descriptor used in conjunction with specific facilities identifying units having an ornamental, aesthetic character.

Department of Public Service (DPS) – State of New York Department of Public Service.

Direct Buried Cable (DB, DBC) – A specific type of electrical wire having an appropriate protective insulation jacket used in applications were the cable is installed underground without any specific bedding or secondary protective material covering.

Direct Embedded (DE) – An installation methodology or a designation of a lighting standard that does not require a foundation due to the construction technique of implanting or setting an engineered extension of the standard into an excavation and structurally backfilling to provide the required support.

Edison Electric Institute (EEI) – A utility industry sponsored standards organization.

Received: 02/24/2012
Status: EFFECTIVE
Effective Date: 05/21/2012

GENERAL INFORMATION

III. TERMINOLOGY DEFINITIONS AND ABBREVIATIONS

Equipment – A general reference to customer owned, operated and maintained devices or components specific to the character of service.

Extra Heavy Duty (XHD) – A component having an increased size, thickness or strength necessary to meet the requirements of structural loading conditions.

Facilities – A general reference to company owned, operated and maintained devices, components or infrastructure assemblies specific to the service classification character of service.

Facility Charges – The assignment of a rate to Company owned components which represent the procurement, installation, operation and maintenance value of each in-service asset.

Festoon Outlet (FO) – An electrical receptacle having the proper encasement and weatherproof cover which is integral with or mounted to a street lighting standard or distribution pole to provide a 120V, unmetered electric source for miscellaneous attachment applications requiring service. The assembly is often referred to as a convenience outlet.

Fiberglass (FG, FBGL) – A composite material comprised of epoxy resin and glass fibers or glass cloth, cast into specific product shapes to provide a strong, light weight, non-conductive material.

Floodlight (FL) – A luminaire type that produces a broad dispersion of light to provide illumination of a large area.

Foundation (FD, FDN) – A structure of varied materials and designs that are typically required to support a lighting standard.

Fluorescent (FR) – A linear tube shaped glass envelope containing specific elements that when charged with electricity react with the internal phosphorus coating to emit a white light.

Heavy Duty (HD) – A descriptor used in conjunction with specific facilities to identify units having an increased design load capacity or engineered strength.

High Intensity Discharge (HID) – A family of lamps including HPS, LPS, MH and MV which produce various color spectrums of light by means of applying an electric arc within a transparent quartz arc tube incorporating tungsten electrodes and various compositions of gas and metal elements.

High Pressure Sodium (HPS, HS) – A HID lamp that produces a slightly yellow-colored light.

Hour (HR) – A unit of time measure equal to 60 minutes.

Illuminating Engineering Society of North America (IESNA, IES) – A lighting industry sponsored illuminating engineering standards organization.

Incandescent (IN, INC) – A tungsten filament vacuum lamp technology which produces a moderately white light.

Received: 10/30/2015
Status: EFFECTIVE
Effective Date: 06/01/2016

GENERAL INFORMATION

III. TERMINOLOGY DEFINITIONS AND ABBREVIATIONS

Induction (IND, ID) – An electrodeless lamp technology utilizing a microwave or radio frequency generator to induce an electromagnetic flux field to energize conventional fluorescent phosphors producing a white light.

Intra-Account Netting – The method of computing the appropriate billing amount for a customer within a bill account in a given bill period by off-setting the cumulative value of facilities or other billing components discovered to have been underbilled in that bill period against the cumulative value of facilities or other billing components discovered to have been overbilled in that bill period.

kilowatt (kW) – One thousand watts.

kilowatt hour (kWh) – One kilowatt for one hour.

Lamp (LP) – The component which, when energized, produces the light output and is typically comprised of a base, electrodes, filament or arc tube and glass envelope, and is also referred to as a bulb.

Lamp/Luminaire (LL) – The specific combination of a lamp or other light source and luminaire based upon their unique requirements.

Light Emitting Diode (LED or LE) – A solid-state or semiconductor device that creates optical radiation through electroluminescence which is transmitted in conjunction with phosphors and biased in a forward direction to produce a broadband, visual spectrum white light.

Light Source – Individual or an array of devices or light engines integrated within a luminaire which produces desired illumination levels other than traditional HID, IND or INC lamp technology.

Lighting District (LD) – A municipally defined geographic area, typically established for the purpose of tax assessment of specific lighting facilities to a distinct constituent group of users, residents or businesses.

Low Pressure Sodium (LPS, LS) - A HID lamp that produces a monochromatic amber-colored light.

Luminaire (LM) – The assembly incorporating multiple elements to support, energize and control the light source and the optical system comprised of the reflector and/or refractor to manage and direct the light output.

Mercury Vapor (MV) – A HID lamp that produces a blue-white light.

Metal Halide (MH) – A high intensity discharge (HID) lamp technology that produces a white light.

National Electrical Manufacturers Association (NEMA).

Overhead (OH) – A general reference to aerial circuitry/conductor or an aerial type supply service application.

Pedestrian (PED) – Reference to a luminaire or lighting assembly specifically sized or designed to provide appropriate lighting to areas predominately used for non-motorized vehicular traffic.

Photocontrol (PC, PEC) – Photoelectric-control is the control device which operates the on/off function of the energy source to the luminaire based upon specified settings of ambient sunlight as further defined in Normal Hours of Operation.

Pole (PL) – A wood structural support for the electric distribution system and for a luminaire, incorporating a bracket, which is typically sourced from an overhead circuit.

Effective date postponed to 06/01/2016. See Supplement No. 26.

Received: 06/17/2013
Status: EFFECTIVE
Effective Date: 07/19/2013

GENERAL INFORMATION

III. TERMINOLOGY DEFINITIONS AND ABBREVIATIONS

Post Top (PT) – A standard specifically designed to allow the luminaire to mount directly to the tenon at the top of the shaft without an arm.

Precast (PC) – A type of concrete foundation manufactured in a controlled fabrication environment to engineered specifications.

Public Service Commission (PSC) – State of New York Public Service Commission.

Residential (RES) – A property, dwelling, premise or community consisting of single or multiple unit structures specifically used as housing.

Round (RD, RND).

Screw Type Foundation (ST) – A type of mechanical foundation consisting of a galvanized steel tubular shaft having an external helix which, when set or spun into the earth provides anchorage to support a lighting standard bolted to its base plate.

Service Classification (SC) – A level of service defined by a unique character of service for a particular customer segment having specific offerings, rates, terms and conditions.

Solid State Lighting (SSL) – A light source category that utilizes various material forms of semiconductor diodes to produce optical radiation by electroluminescence.

Square (SQ).

Standard (SD, STD) – A metallic or composite material structural support for a luminaire, often incorporating an arm, that is typically sourced from an underground circuit.

Teardrop (TD) – A style of luminaire that hangs vertically from an arm or bracket with the mounting at the top of the luminaire.

Traffic Control (TC) or Traffic Signal (TS) – A general reference to the equipment and structures necessary to maintain the safety of vehicles and pedestrians at locations of conflict or as otherwise required.

Underground (UG) – A general reference to buried circuitry/cable or a buried supply service application.

Underground Residential Distribution (URD) – A general reference to buried electric circuitry or buried electric supply service facilities used for service applications of this tariff within a geographic area having underground distribution service pursuant to Rule 16 of the Electric Tariff and compliant with the PSC order issued on December 28, 1971 including all subsequent amendments and supplements.

Watt (W) – A unit measure of electric power consumption.

Received: 03/10/2011
Status: EFFECTIVE
Effective Date: 01/01/2012

GENERAL INFORMATION

IV. TERMS AND CONDITIONS APPLICABLE TO ALL SERVICE CLASSIFICATIONS

The referenced terms and conditions below are applicable to all service classifications in this tariff and as further defined within the specific service classification, which may be amended from time to time.

Character of Service SC-1, 2, 3, 4, 6
Electric service supplied unmetered shall be provided at approximately 60 Hertz and at appropriate voltages and currents as designated by the Company.

A. Overhead Service SC-1, 2, 3, 4, 6
Overhead Service is available in those areas where the Company operates an overhead distribution system at the appropriate service voltage to operate and/or support the facilities or equipment applicable in this service classification.

B. Underground Service SC-1, 2, 3, 4, 6
Underground Service is available in those areas where the Company operates an underground distribution or network system at the appropriate service voltage to operate and/or support the facilities or equipment applicable in this service classification.

Rate

A. Volumetric Charges

1. Volumetric Energy Consumption SC-1, 2, 3, 4, 6
The cumulative unmetered energy for the billing period, measured in kilowatt-hours (kWh), is the aggregate of the energy consumed by individual electrical devices, components or assemblies as specifically defined in the service classification.

4. Company Supplied Electricity Supply Service Charges, per kWh SC-1, 4
6. Company Supplied Electricity Supply Service Charges, per kWh SC-2, 3, 6
The Company Supplied Electricity Supply Service Charges, measured in kWh, shall be set according to the market price of electricity in compliance with Rule 46.1.2 as more fully described in the Company's Electric Tariff and as amended from time to time.

Received: 05/24/2016
Status: EFFECTIVE
Effective Date: 06/01/2016

GENERAL INFORMATION

IV. TERMS AND CONDITIONS APPLICABLE TO ALL SERVICE CLASSIFICATIONS

B. Adjustment to Volumetric Charges SC-1, 2, 3, 4, 6

The Volumetric Charges, measured in kWh, shall be subject to specific adjustments applied in compliance with the Rules identified below, as more fully described in the Company's Electric Tariff and as amended from time to time.

Rule 32.2 – Municipal Undergrounding Surcharge
Rule 41 - System Benefits Charge
Rule 42 - Merchant Function Charge
Rule 43 - Transmission Revenue Adjustment
Rule 46 – Supply Service Charges
Rule 49 - Renewable Portfolio Surcharge
Rule 56 - Incremental State Assessment Surcharge
Rule 59 - Temporary Deferral Recovery Surcharge
Rule 64 - Dynamic Load Management (DLM) Surcharge

C. Increase in Rates and Charges SC-4
E. Increase in Rates and Charges SC-3
F. Increase in Rates and Charges SC-1, 6
G. Increase in Rates and Charges SC-2

The rates and charges including any adjustment to charges and the minimum charge will be increased by a tax factor pursuant to Rule 32 of the Electric Tariff.

Determination of Billing SC-1, 2, 3, 4, 6
The billing of rendered services shall comply with, but not be limited to, the terms and conditions as provided hereunder and as may be further defined within the service classification.

A. Minimum Charge SC-1, 2, 3, 4, 6
Customer is obligated to pay the charges for service provided hereunder as is further defined within the service classification.

B. Determination of Billing Quantities SC-1, 2, 3, 4, 6
The charge for lighting service hereunder during each billing cycle shall be based upon facilities/equipment in service and any related energy and adjustments as of the first day of that billing cycle.

C. Terms of Payment SC-1, 2, 3, 4, 6
Bills are due and payable. Full payment must be received on or before the date shown on the bill to avoid a late payment charge of one and one-half percent (l-l/2%) per month pursuant to Rule 26.4 of the Electric Tariff.

Received: 02/24/2012
Status: EFFECTIVE
Effective Date: 05/21/2012

GENERAL INFORMATION

IV. TERMS AND CONDITIONS APPLICABLE TO ALL SERVICE CLASSIFICATIONS

D. Billing Discrepancies SC-1, 2, 3, 4, 6

1. Billing Discrepancy Notification
The customer shall provide written notice to the Company of a billing dispute, which shall consist of a complete description of the disputed billing elements including, but not limited to, the account number, billing components and time period(s) in question.

2. Customer Records
The Company shall have no obligation to produce documents relating to applications or requests for service, or documents relating to additions, deletions, modifications or changes in service that were made more than six (6) years from the time of such request for documents.

3. Adjustment of Previous Bills
Previous billing period bills for a customer account shall be adjusted, as applicable, using Intra-Account Netting. If the application of this method results in a net overbilling, a refund or credit will be issued to the customer. If the application of the method results in a net underbilling, then the recovery of that amount is subject to the applicable backbilling rules.

4. Backbilling
The application of backbilling shall be consistent with the rules and procedures set forth in 16NYCRR, Section 13.9 and as presented in Rule 26 of the electric tariff. The Company shall not render a backbill more than six (6) months after the Company became aware of the circumstances, error or condition that caused the underbilling, unless a court extends the time to render a backbill. The Company shall not bill a customer for service rendered more than twenty-four (24) months prior to the Company actually becoming aware of the circumstance, error, or condition that caused the underbilling, unless the Company can demonstrate that the customer knew or reasonably should have known that the original billing was incorrect.

Term SC-1, 2, 3, 4, 6
The initial term of service shall be as mutually agreed upon between customer and Company but not less than one (1) year or more than five (5) years as may be further defined within the service classification. Service shall continue in effect from year to year thereafter until canceled by either party upon ninety (90) days prior written notice.

In the event service is terminated at the customer's request as defined in General Provisions, Termination of Service, prior to completion of the initial term as specified, the customer shall be obligated to pay the Minimum Charge as is further defined within the service classification.

Received: 02/24/2012
Status: EFFECTIVE
Effective Date: 05/21/2012

GENERAL INFORMATION

IV. TERMS AND CONDITIONS APPLICABLE TO ALL SERVICE CLASSIFICATIONS

Provisions

A. General Provisions

1. Company Service Liability Disclaimer SC-1, 2, 3, 4, 6
As a condition of service hereunder, the Company will not be liable for any injury, casualty or damage resulting in any way from the supply or use of electricity in customer's equipment or the rental use of Company facilities. Company will use reasonable diligence to provide a continuous regular and uninterrupted supply of service and in event of an interruption, Company shall make a reasonable effort to restore service promptly.

2. Customer Equipment Liability Disclaimer SC-1, 2, 3, 4, 6
The Company is not responsible, liable, nor gives any warranty, expressed or implied, for the adequacy, safety or other characteristics of any structures, equipment or wires owned, installed, operated or maintained by customer or leased by customer from third parties

3. Electrical Supply Connections SC-1, 2, 3, 4, 6
The permanent or temporary connection, disconnection or reconnection of any electrical source in compliance with the designated service provided will only be made by the Company or an authorized agent. The installation of any customer equipment will comply with applicable regulations, codes, standards and Company construction standards including, but not limited to, the installation of a Company approved service disconnect device for any new customer luminaire location or any existing customer luminaire location which experiences an equipment material change or other physical alteration. Customers may install a Company approved service disconnect device for existing customer luminaire locations to be served hereunder. All contractual requirements, permits, rights-of-way and inspections shall be satisfied in a manner acceptable to the Company prior to final service being provided.

4. Excessive Damage to Company Facilities SC-1, 2, 3, 4, 6
Applicable to service classifications having Company facilities and where as excessive damage is defined as the second occurrence of service within a consecutive twelve (12) month period to facilities which become subject to excessive damage requiring extraordinary maintenance, replacement, unusually high incidents of physical damage or vandalism will require the customer to reimburse the Company for actual costs incurred for the additional maintenance and/or facility replacement performed.

5. Extension of Company Distribution Facilities SC-1, 2, 3, 4, 6
Whereas applicable service herein can only be supplied from an extension of the electric distribution system for the sole purpose of providing appropriate electric secondary supply service to the Company facilities or customer equipment defined herein and when this service is provided at the time of the installation or construction of the facilities or equipment, the customer will comply with Rule 28 of the Electric Tariff and be responsible to compensate the company as a contribution in aid of construction (CIAC) per the Company’s Electric System Bulletin 120.

Received: 02/24/2012
Status: EFFECTIVE
Effective Date: 05/21/2012

GENERAL INFORMATION

IV. TERMS AND CONDITIONS APPLICABLE TO ALL SERVICE CLASSIFICATIONS

A. General Provisions (Continued)

6. Legislative Hierarchy SC-1, 2, 3, 4, 6
Service hereunder shall be deemed subject to the provisions of Sections 103-A of the General Municipal Law of the State of New York as amended from time to time.

7. Lighting Design Liability Disclaimer SC-1, 2, 3, 4, 6
As a condition of service hereunder, the customer is exclusively responsible for determining the location, orientation, support structure, type and style of lamp/luminaire combination of the lighting assembly, and the adequacy of the resulting illumination in accordance with applicable industry guidelines, legislation or regulations.

8. Maintenance of Customer Owned Equipment SC-1, 2, 3, 4, 6
As a condition of service hereunder, the company is not responsible for and will not provide maintenance services to facilitate the operation of customer equipment which requires repair or replacement unless otherwise specified in the applicable service classification.

9. Property Rights SC-1, 2, 3, 4, 6
Through the requisition for service hereunder, customer acknowledges and warrants real property ownership, jurisdictional control, appropriate title and/or compliance with deed requirements or restrictions, or the applicable authorization to express, furnish and grant good and sufficient rights, easements, right-of-way, consents and/or permits, in compliance with all applicable codes and standards, satisfactory to and at no cost to Company, whereby Company can place, operate and maintain its facilities or extend its electric distribution system in, upon, under or across the designated lands or improvements to provide such service.

10. Service Classification Revision SC-1, 2, 3, 4, 6
In the event of changes or revisions of this service classification, customer shall take and pay for service in accordance with the provisions of the revised or superseding service classification. Charges to customer shall be prorated between the superseding and the superseded rate on the basis of the actual number of days in the billing period, with the superseding charges applying to the days of service taken on and after the effective date of such change.

11. Service Jurisdiction SC-1, 2, 3, 4, 6
Service hereunder will be supplied by Company subject to the provisions of orders, amendments and interpretations thereof by any governmental body having authority or jurisdiction over such service notwithstanding anything to the contrary in the rules and regulations, and the terms and conditions of service as set forth herein.

Received: 02/24/2012
Status: EFFECTIVE
Effective Date: 05/21/2012

GENERAL INFORMATION

IV. TERMS AND CONDITIONS APPLICABLE TO ALL SERVICE CLASSIFICATIONS

A. General Provisions (Continued)

12. Service Limitations SC-1, 2, 3, 4, 6

While providing service hereunder, should unrelated events cause the required facilities of the electric distribution system to cease to be available, service may be terminated by Company in accordance with provisions of Termination of Service.

In areas where the Company only has an underground electric distribution system, overhead service as designated within the service classification will not be available.

13. Site Restoration SC-1, 2, 3, 4, 6

The Company shall only be responsible for restoration of the area impacted by the construction or maintenance of the applicable service limited to basic hardscape and/or landscape applications. The incremental replacement cost of unique, decorative hardscape surface treatments or landscape applications will be the responsibility of the customer.

14. Termination of Service SC-1, 2, 3, 4, 6

The Company or customer has the right to terminate service as specified by the respective service classification hereunder or under a superseding service classification or contract and as may be further defined in the applicable application for service form and any corresponding schedule, provided a minimum ninety (90) days prior written notice is provided to the other party.

The Company shall have the right, at its discretion, to remove or retire in place any Company owned facilities used pursuant to supplying such service or to discontinue service to any customer owned equipment, which in the opinion of Company, shall have attained its end of useful life, become unsafe or unsatisfactory for further service and/or requiring excessive maintenance by reason of deterioration, civil commotion, vandalism, state of war, explosion, fire, storm, flood, lightning, obsolescence or any other cause reasonably beyond Company's control. The customer may be required to pay the applicable Minimum Charge as defined within the service classification. The Company shall restore the areas affected by such termination to the same or as good a condition as existed immediately thereto.

Where the Company is authorized to terminate service for non-payment, the Company may initially implement a temporary disconnection of service. The customer shall be responsible for all service charges to facilitate such electrical disconnection and all applicable Facility Charges during any such temporary disconnection, except that commencing on the first day of each billing cycle after the implementation of such temporary disconnection, the following charges as defined under RATE within each Service Classification applicable to the disconnected facilities shall be adjusted to zero (0):

a. Volumetric Charges and Adjustments to Volumetric Charges, and,
b. Lamp and/or Lamp/Luminaire Facility Charges inclusive of all Facility Classifications.

The Company may terminate service to any customer where a temporary disconnection has already been implemented and remains in effect. Prior to implementing any such termination of service, the Company shall serve on the customer an additional notice of discontinuance of service in conformance with Rule 14 of the Electric Tariff and 16 N.Y.C.R.R. § 13, which notice shall also specify the amount, if any, that the customer shall owe to the Company under this Tariff as a result of that termination of service.

Received: 02/24/2012
Status: EFFECTIVE
Effective Date: 05/21/2012

GENERAL INFORMATION

IV. TERMS AND CONDITIONS APPLICABLE TO ALL SERVICE CLASSIFICATIONS

15. Undergrounding of Electric Distribution System Infrastructure SC-1, 2, 3, 4, 6

As provided in Rule 32.2 of the Electric Tariff, if a municipality requests or requires, by resolution or other appropriate evidence of authority, that the Company relocate underground all or a portion of the Company's existing overhead distribution or transmission facilities within the boundaries of such municipality ("Overhead Facilities"), the Company will recover the costs of complying with such request or requirement through a levelized surcharge applied to the kWh usage on the bills of all customers within such municipality. Such surcharge shall be applied for a period of 30 years, or such other term not to exceed 30 years, as agreed upon by the Company and the municipality for the recovery of the cost of the undergrounding project ("Surcharge Period"). The cost of complying with subsequent requests or requirements for undergrounding work shall be recovered through separate levelized surcharges. The surcharge will be calculated to recover the incremental annual revenue requirement experienced by the Company in implementing the undergrounding project. The elements of the incremental annual revenue requirement for each undergrounding project ("Underground Facilities") shall be the incremental costs, the incremental depreciation expense, the rate of return, incremental property taxes resulting from the undergrounding facilities, and other incremental expenses. The surcharge shall be calculated as set forth in Rule 32.2 of the Electric Tariff.

16. Vegetation Management SC-1, 2, 3, 4, 6

As a condition of service hereunder, customer authorizes Company, insofar as it lawfully may, to trim, cut, remove, and to keep trimmed, cut and removed any and all trees, vegetation and other obstructions which, in the opinion of Company, interfere with or may tend to interfere with the operation and maintenance of electric service hereunder. The management of vegetation and/or other adjacent physical conditions which obstruct or otherwise impact the operational functionality and/or the intended performance of the lighting facilities is the responsibility of the customer.

Received: 10/30/2015
Status: EFFECTIVE
Effective Date: 06/01/2016

GENERAL INFORMATION

V. TERMS AND CONDITIONS APPLICABLE TO SPECIFIC SERVICE CLASSIFICATIONS

The referenced terms and conditions below are applicable to service classifications containing the specific heading. Supplemental terms and conditions of the general description provided below may be stated within the specific service classification and are to be considered additional and inclusive to the full description of the referenced term or condition, which may be amended from time to time.

Rate

A. Volumetric Energy Consumption

2. Billable Wattage SC-2, 3, 6
Total initial system operating wattage at continuous full rated power of an individual device or assembly comprised of specific nominal lamp or illuminating light source wattages in addition to wattages of other contiguous devices including but not limited to ballasts, drivers, generators and controls. Billable wattages for LED light sources will represent an apportioned ratio of in-service LED luminaire wattages and prospective LED luminaire wattages for respective lumen output ratings. The defined lumen ratings for the LED light sources are provided as nominal illumination output criteria. The Company, at its sole discretion, will use LED light sources of a consistent color temperature which are within a reasonable variance of the nominal lumen criteria until all manufacturers adopt industry criteria standards.

3. Hours of Operation SC-2, 3, 6
5. Hours of Operation SC-1
Estimated yearly time of functional operation of a device or assembly, measured in hours which is required as a determinate in the calculation of unmetered energy consumption.

Normal Hours of Operation SC-1, 2, 3, 6
Estimated yearly functional operation of a device or assembly, measured in hours, maintaining a dusk-to-dawn service schedule, photo-electrically controlled to operate from approximately ½ hour after sunset until approximately ½ hour before sunrise, totaling approximately 4170 hours per year and 4183 hours per leap year.

Continuous Hours of Operation SC-2, 3, 6
Estimated yearly functional operation of a device or assembly, measured in hours, maintaining a constant or 24 hour per day service schedule, totaling approximately 8760 hours per year and 8784 hours per leap year.

Non-standard Hours of Operation SC-1, 2, 3, 6
Alternate hours of operation and/or duration will require the implementation of a metered service classification as provided within the Company's Electric Tariff.

Effective date postponed to 06/01/2016. See Supplement No. 26.

Received: 01/31/2011
Status: EFFECTIVE
Effective Date: 02/01/2011

GENERAL INFORMATION

V. TERMS AND CONDITIONS APPLICABLE TO SPECIFIC SERVICE CLASSIFICATIONS

D. Other Charges and Credits SC-3
E. Other Charges and Credits SC-6
F. Other Charges and Credits SC-1, 2

The charges and credits associated hereunder are identified as adjustments on the service bill. These charges and credits represent occasional occurrences of services requested by the customer.

1. Outage Credit Allowance SC-1, 2, 3, 6

Company will use reasonable diligence to provide a continuous, regular and uninterrupted electrical distribution service supply, and in the event of interruption, Company shall make a reasonable effort to restore distribution service promptly. The Company may provide an Outage Credit Allowance for facilities specifically described in the respective service classifications which are malfunctioning. The facility malfunction (outage) cannot result from causes originating from customer's equipment, distribution system failure, system maintenance work by the Company or its agents, an act of God or force majeure. The customer must provide proper notification of the facility (outage) including definitive location information and problem type to the Company. The outage credit allowance to the customer is agreed upon as liquidated damages and customer shall have no claim against Company for further damages arising out of, or connected with, such outages.

2. Lighting Service Charge SC-2, 3, 6

Lighting Service Charge is applicable for each occurrence of Company service provided in response to customer requests which are unrelated to the standard operation, maintenance and performance of facilities owned by the Company. These additional services include, but shall not be limited to customer requested connection, reconnection and disconnection occurrences for each application of "Discontinuance" service (as described herein), convenience outlet service, in association with terms and conditions of separate attachment agreements, preventative or proactive operation or maintenance activities to address vandalism or lighting control, supply service work associated with customer owned equipment, and/or other such actions which, unless requested by the customer would otherwise have not been warranted, per location. A charge will not be assessed if, in the sole discretion of the Company, the conditions which created the need for the customer request were determined to be the result of Company facilities or systems. The Lighting Service Charge will be assessed on a regular billing schedule unless otherwise specified.

2. Relocation of Existing Facilities SC-1
3. Relocation of Existing Facilities SC-2
4. Relocation of Existing Facilities SC-3, 6

The Company, joint owner, or prior licensees may relocate existing facilities to accommodate customer desired service under the referenced service classification provided the relocation is performed by the respective facility owner and the customer is responsible for all costs incurred. Relocation of Company facilities will be in accordance with Rule 28 of the Company's Electric Tariff as amended from time to time. Certain Company facilities are considered permanent and will be addressed as specified within the service classification.

Received: 10/30/2015
Status: EFFECTIVE
Effective Date: 06/01/2016

GENERAL INFORMATION

V. TERMS AND CONDITIONS APPLICABLE TO SPECIFIC SERVICE CLASSIFICATIONS

Provisions

B. Special Provisions

1. Ancillary Equipment SC-1, 2, 6

Specific to the applicability of the service provided under the service classification, at the request of the customer, the Company shall take reasonable actions to procure and install the necessary ancillary equipment, including but not limited to shields, visors, louvers and protective devices, for the purpose of providing special control of light distribution or vandal prevention of the facilities in-service, provided all ancillary equipment costs and associated service charges are the responsibility of the customer.

2. Attachments to Company Facilities SC-1, 2, 6

As a condition of service hereunder, the Company has exclusive rights of ownership of the Company facilities either defined within this service classification or utilized to provide service herein and reserves the privilege and sole discretion to permit the use of such facilities for the support and physical attachment of other, non-company owned equipment under the terms and conditions of a separate agreement or license. The Company may, at is sole discretion, provide electric delivery service as applicable under another service classification in the Electric Tariff. The Company will have no responsibility for the attachments except as defined in the separate agreement or license. The attachment will not adversely impact the service as defined within this service classification.

3. Customer Equipment Identification SC-4
4. Customer Equipment Identification SC-3
5. Customer Equipment Identification SC-2, 6
6. Customer Equipment Identification SC-2

As a condition of service hereunder, the customer is responsible for the installation of Company specified identification including but not limited to tagging to designate customer-ownership of equipment and unique location identification labeling incorporating a numbering sequence or other designation to assist in ownership and location verification. The customer is also required to provide identification in accordance with ANSI-NEMA Standards for Roadway and Area Lighting Equipment – Luminaire Field Identification, (ANSI-NEMA C136.15, latest revision), as applicable.

Effective date postponed to 06/01/2016. See Supplement No. 26.

Received: 03/29/2013
Status: EFFECTIVE
Effective Date: 04/01/2013

GENERAL INFORMATION

V. TERMS AND CONDITIONS APPLICABLE TO SPECIFIC SERVICE CLASSIFICATIONS

B. Special Provisions (Continued)

5. Customer Responsibilities SC-4
6. Customer Responsibilities SC-3
7. Customer Responsibilities SC-6
8. Customer Responsibilities SC-2

Whereas the customer is the designated owner and responsible entity for the operation and maintenance of the infrastructure system receiving all or a portion of the service as stated herein, the customer is further responsible for the following requirements:

a. The procurement, installation, operation, maintenance, repair, replacement and removal of all customer owned infrastructure, systems and equipment.

b. The infrastructure system or equipment shall be constructed/installed/attached in accordance with all requirements and specifications of the applicable industry codes and standards, Company construction standards and specifications, and any requirements, specifications or standards of other joint owners/users and attachment licensees including, but not limited to, the installation of appropriate Company approved electric disconnect devices having electric distribution protection capability and associated grounding requirements.

c. The infrastructure system wiring is to be approved by an inspection agency certified in the system wiring application being inspected and having appropriate authority in the applicable jurisdiction. The entire infrastructure system will be constructed/installed prior to the submission for connection to Company's supply circuitry.

d. All supply connections/disconnections to the Company's distribution system are to be made by Company personnel or assigned designee.

e. Customer shall furnish a scaled map/drawing and corresponding inventory list of its equipment for Company use prior to initial installation and as requested by the Company but not to exceed an annual cycle. The map/drawing and equipment inventory list shall indicate the location, ownership, type of device and/or light source, total operational wattage rating and the location and type of any underground system components in triplicate with its application for service. Location information will include the customer designated unique structure identification reference. Type of device will include the physical description, industry naming convention, nominal wattage rating and all component energy consumption values at maximum operating conditions in wattages. The required equipment and location identification system is to be acceptable to Company.

Received: 10/30/2015
Status: EFFECTIVE
Effective Date: 06/01/2016

GENERAL INFORMATION

V. TERMS AND CONDITIONS APPLICABLE TO SPECIFIC SERVICE CLASSIFICATIONS

B. Special Provisions (Continued)

3 Facility/Equipment Obsolescence SC-1
7. Facility/Equipment Obsolescence SC-6
9. Facility/Equipment Obsolescence SC-2

Facilities or equipment may be designated obsolete by the Company due to their limited availability of new or comparable replacement units, unobtainable maintenance parts, exhibit excessive price increases, or whose functional technologies are no longer considered standard by the industry due to legislative or regulatory mandates, compliance with industry codes, standards and guidelines and efficiency determinates.

4. Facility Service Limitation SC-1
8. Facility Service Limitation SC-6
10. Facility Service Limitation SC-2

As a condition of service hereunder, Company facility service is not available for; locations inaccessible by standard Company motorized equipment, limited access highways, bridges, tunnels and the access and egress ramps thereto, unless pre-existing or as authorized by the Company.

Effective date postponed to 06/01/2016. See Supplement No. 26.

Received: 02/24/2012
Status: EFFECTIVE
Effective Date: 05/21/2012

SERVICE CLASSIFICATION NO. 1
PRIVATE LIGHTING - UNMETERED
COMPANY OWNED, COMPANY MAINTAINED

APPLICABLE TO USE OF SERVICE FOR:

Outdoor lighting of private areas other than public streets, highways and roadways, for individuals, private organizations and institutional establishments. Available only where suitable Company secondary distribution circuits are available or are made available as provided herein.

CHARACTER OF SERVICE:

Electric service is provided to Company owned, operated and maintained facilities at a designated service type, as defined below, by the customer.

A. Overhead Service (OH)

Reference General Information, Section IV.

B. Underground Service (UG) - CLOSED OFFERING

This underground electric lighting service is closed to new applicants or new installations for existing customers as of MAY 21, 2012. The Company will maintain service of existing installations to customers presently under this Character of Service. Reference General Information, Section IV.

APPLICATION FOR SERVICE:

The Company may require written application on the Company's Form "PL", however, failure to execute a Form "PL" shall not exempt the customer from paying all rates and charges provided herein. The Form "PL" will list the specific facilities and quantities initially supplied and the applicable monthly charges. Such application, when accepted by Company, shall constitute an agreement between customer and Company, subject to the terms and conditions set forth in this service classification provided however that failure to include any lighting facilities in the customer's Form "PL" shall not exempt the customer from paying all rates and charges applicable hereunder to such facilities.

FACILITY CLASSIFICATIONS:

A designation assigned to all company owned facilities that define the customer availability of the offering and the associated degree of Company maintenance or replacement.

A. Standard Facility

A facility offering that is available to all customers for new and existing installations and which the Company will provide full maintenance service and in-kind replacement. The Company will attempt to supply standard facilities that have a consistent aesthetic appearance to existing operational facilities. The Company may use facilities that from time to time experience design or production modifications and/or the utilization of alternate manufacturers.

Received: 01/31/2011
Status: EFFECTIVE
Effective Date: 02/01/2011

SERVICE CLASSIFICATION NO. 1 (Continued)

B. Closed Facility

A facility offering that is available only to customers having installations with existing applications and which the Company will continue to provide full maintenance and in-kind replacement. Closed facilities are not available to new applicants or for new installations or as a replacement for existing installations utilizing other facilities

C. Obsolete Facility

A facility offering that is no longer available for new applicants, new installations or in-kind replacement and which the Company will not provide continued maintenance service. Customers receiving service utilizing obsolete facilities are to provide the Company an authorization specifying a replacement plan designating facilities considered standard at the time or identify an alternate resolution consistent with an applicable service classification. Reference, General Information, Section V, Special Provisions, Facility/Equipment Obsolescence for further application definition.

RATE:
The charges presented below are applicable to all customers served by this service classification.

A. Volumetric Charges

1. Volumetric Energy Consumption

The cumulative energy consumed by the individual lamp/luminaire is determined by the aggregation of each luminaires' corresponding type and size of lamp as identified below in Table 1, Monthly Energy Consumption, to yield kWh. Reference General Information, Section IV.

Table 1 - Monthly Energy Consumption

Monthly Energy Consumption (kWh)

	Lamp Wattage			
	Mercury Vapor			Metal Halide
Months	175	400	1000	400
January	94	212	486	200
February*	78	176	403	166
March	76	173	396	163
April	64	145	334	138
May	58	131	301	124
June	52	117	269	111
July	56	126	289	119
August	64	144	330	136
September	70	159	366	151
October	83	187	430	177
November	89	201	461	190
December	96	218	500	206
* Leap Year Adjustment				
February	80	182	417	172

Received: 02/27/2015
Status: EFFECTIVE
Effective Date: 04/01/2015

SERVICE CLASSIFICATION NO. 1 (Continued)

Monthly Energy Consumption (kWh's)

	Lamp Wattage					
	High Pressure Sodium					
Months	70	100	150	250	400	1000
January	38	52	77	135	209	491
February*	32	43	64	112	173	407
March	31	43	63	110	170	400
April	26	36	53	93	143	337
May	24	32	48	84	129	304
June	21	29	43	75	116	272
July	23	31	46	80	124	292
August	26	36	52	92	141	333
September	29	39	58	102	157	369
October	34	46	68	119	185	435
November	36	50	73	128	198	466
December	39	54	79	139	215	505
* Leap Year Adjustment						
February	33	45	66	116	179	421

2. Distribution Delivery Charge for all Load Zones, per kWh $0.08787

3. Company Supplied Electricity Supply Service Charges, per kWh
   Reference General Information, Section IV.

4. Hours of Operation
   Reference General Information, Section V.

   Normal Hours of Operation
   Reference General Information, Section V.

   Non-standard Hours of Operation
   Reference General Information, Section V.

B. Adjustment to Volumetric Charges

   Reference General Information, Section IV.

Received: 02/27/2015
Status: EFFECTIVE
Effective Date: 04/01/2015

SERVICE CLASSIFICATION NO. 1 (Continued)

C. Standard Facility Charges

The charges associated with the identified categories of facility offerings presented below are applicable to all customers served by this standard facility classification, when appropriate. The charge for facility service during each billing cycle shall be the applicable monthly amounts set forth herein as of the first day of such billing cycle.

1. Lamp/Luminaire Charge
The monthly lamp/luminaire charges, per unit without volumetric charges and adjustments, are presented below in Table 2. Lamp/Luminaire charges are determined by lamp type and size (watts) and luminaire type.

Table 2 - Lamp/Luminaire Charge-(Standard)

Monthly Lamp/Luminaire Charge, per unit ($)

Lamp/Luminaire Type	Lamp Size (Watts)					
	70	100	150	175	250	400
High Pressure Sodium						
Floodlight	-----	-----	-----	-----	6.21	6.21
Roadway	4.79	4.80	4.82	-----	5.50	5.52
Metal Halide						
Floodlight	-----	-----	-----	-----	-----	7.13

2. Pole/Standard Charge
The monthly pole or standard charges per unit are presented below in Table 3. The pole/standard charges are determined by the type of pole or standard and its height.

When suitable poles are available on Company's existing secondary distribution circuits no additional charge will be made for a lighting attachment to such poles for lamps served under this service classification.

When installation of additional poles and overhead secondary supply circuits are required, Company will install, own and maintain necessary poles, overhead wires, guys and anchors, but not more than one pole per lamp and luminaire served hereunder. Customer shall pay applicable monthly facility charges as stated in RATE.

Extension of the electric distribution system for the purpose of providing appropriate electric service to the applicable facilities will comply with General Provision – Extension of Company Distribution Facilities as defined in General Information, Section IV.

Received: 02/27/2015
Status: EFFECTIVE
Effective Date: 04/01/2015

SERVICE CLASSIFICATION NO. 1 (Continued)

Table 3 - Pole/Standard Charge (Standard)

Monthly Pole/Standard Charge, per unit

Pole/Standard Type	Monthly Charge ($)
Pole – for OH Service	
Wood – existing (distribution service)	No Charge
Wood – additional (secondary service)	6.51

3. Arm/Bracket Charge
The monthly arm and bracket charges, per unit are presented below in Table 4. The arm and bracket charges are determined by the type of standard or pole to which it is attached.

Table 4 - Arm/Bracket Charges (Standard)

Monthly Arm/Bracket Charge, per unit

Arm/Bracket Type	Monthly Charge ($)
Bracket – for Wood Pole	
Roadway – aluminum - all types/sizes	No Charge
Floodlight – aluminum – all types/sizes	No Charge

4. Private Lighting Circuit Charge
The monthly private lighting circuit charges, per unit are presented below in Table 5. Private lighting circuit charges are compliant with the standard types of service. The Company will provide the engineering, design, configuration and alignment of the private lighting circuit facilities.

Table 5 - Private Lighting Circuit Charge (Standard)

Monthly Private Lighting Circuit Charge, per unit

Private Lighting Circuit Type	Monthly Charge ($)
Overhead	
Standard Overhead Service (OH) – one span	3.03

Additional overhead circuit charges will be assessed at the above stated rate for each secondary supply single span of 150 feet installed, or any fraction thereof.

Received: 02/27/2015
Status: EFFECTIVE
Effective Date: 04/01/2015

SERVICE CLASSIFICATION NO. 1 (Continued)

D. Closed Facility Charges

The charges associated with the closed facilities presented below are applicable to those customers having such facilities in service. The charge for facility service during each billing cycle shall be the applicable monthly amounts set forth herein as of the first day of such billing cycle. Additional charges and credits are provided for in the applicable sections of this service classification.

1. Lamp/Luminaire Charge
   The closed monthly lamp/luminaire charges, per unit, without volumetric charges and adjustments, are presented below in Table 6. Lamp/Luminaire charges are determined by lamp type and size (watts) and luminaire type.

Table 6 - Lamp/Luminaire Charge (Closed)

Monthly Lamp/Luminaire Charge, per unit ($)

Lamp/Luminaire Type	Lamp Size (Watts)						
	70	100	150	175	250	400	1000
High Pressure Sodium							
Coach	9.44	9.42	9.42	-----	-----	-----	-----
Edison	9.00	9.51	-----	-----	-----	-----	-----
Floodlight	-----	-----	-----	-----	-----	-----	7.72
Roadway	-----	-----	-----	-----	-----	-----	10.71
Shoebox	-----	-----	-----	-----	7.50	7.63	-----
Traditional	5.09	5.11	5.09	-----	-----	-----	-----
Metal Halide							
Shoebox	-----	-----	-----	-----	-----	7.68	-----

Received: 02/27/2015
Status: EFFECTIVE
Effective Date: 04/01/2015

SERVICE CLASSIFICATION NO. 1 (Continued)

2. Pole/Standard Charge
The closed monthly pole or standard charges per unit are presented below in Table 7. The pole/standard charges are determined by the type of pole or standard and its height.

Table 7 - Pole/Standard Charge (Closed)

Monthly Pole/Standard Charge, per unit

Pole/Standard Type	Monthly Charge ($)
Standard – (over 16 ft.), for UG Service	
Aluminum – anchor base (AB – w/davit)	17.91
Aluminum – anchor base (AB - square)	39.27
Standard – (16 ft. and under), for UG Service	
Fiberglass – anchor base (AB)	6.21
Fiberglass – direct embedded (DE)	8.32

3. Arm/Bracket Charge
The closed monthly arm and bracket charges, per unit are presented below in Table 8. The arm and bracket charges are determined by the type of standard or pole to which it is attached.

Table 8 - Arm/Bracket Charges (Closed)

Monthly Arm/Bracket Charge, per unit

Arm/Bracket Type	Monthly Charge ($)
Arm – for Standard (over 16 ft.)	
Roadway – aluminum – all types/sizes	No Charge
Floodlight – aluminum – all types/sizes	No Charge

Received: 02/27/2015
Status: EFFECTIVE
Effective Date: 04/01/2015

SERVICE CLASSIFICATION NO. 1 (Continued)

4. Foundation Charge
The closed monthly foundation charges, per unit, are presented below in Table 9. Foundation charges are determined by foundation type and size of standard it supports.

Table 9 - Foundation Charge (Closed)

Monthly Foundation Charge, per unit

Foundation Type	Monthly Charge ($)
Concrete – Cast-In-Place (CIP)	
For anchor base standard – (over 16 ft.)	20.87
Concrete – Pre-Cast (PC)	
For anchor base standard – (all applications)	12.48

5. Private Lighting Circuit Charge:
The closed monthly private lighting circuit charges, per unit are presented below in Table 10. Private lighting circuit charges are compliant with the standard types of service. The Company will provide the engineering, design, configuration and alignment of the private lighting circuit facilities.

Table 10 - Private Lighting Circuit Charge (Closed)

Monthly Private Lighting Circuit Charge, per unit

Private Lighting Circuit Type	Monthly Charge ($)
Underground	
Standard Underground Service (UG) - per foot	
1. Cable & conduit	0.18
2. Cable only	0.03
3. Direct buried cable	0.12

Received: 02/27/2015
Status: EFFECTIVE
Effective Date: 04/01/2015

SERVICE CLASSIFICATION NO. 1 (Continued)

E. Obsolete Facility Charges

The charges associated with obsolete facilities presented below are applicable to those customers having such facilities in service. The charge for facility service during each billing cycle shall be one-twelfth (1/12) of the applicable annual amounts set forth herein as of the first day of such billing cycle. Additional charges or credits are provided for in the applicable sections of this service classification.

1. Lamp/Luminaire Charge
The obsolete monthly lamp/luminaire charges per unit, without volumetric charges and adjustments, are presented below in Table 11. Lamp/Luminaire charges are determined by lamp type and size (watts) and luminaire type.

Table 11 - Lamp/Luminaire Charge– (Obsolete)

Monthly Lamp/Luminaire Charge, per unit

Lamp/Luminaire Type	Lamp Size (Watts)						
	70	100	150	175	250	400	1000
Mercury Vapor							
Floodlight	-----	-----	-----	-----	-----	6.36	7.93
Roadway	-----	-----	-----	4.90	-----	5.66	11.21

2. Foundation Charge
The obsolete monthly foundation charge, per unit, is presented below in Table 12. Foundation charges are determined by foundation type and size of standard it supports.

Table 12 - Foundation Charge– (Obsolete)

Monthly Foundation Charge, per unit

Foundation Type	Monthly Charge ($)
Mechanical - Screw Type (ST)	
For anchor base standard – (all applications)	9.38

Received: 02/24/2012
Status: EFFECTIVE
Effective Date: 05/21/2012

SERVICE CLASSIFICATION NO. 1 (Continued)

F. Other Charges and Credits

Reference General Information, Section V.

1. Outage Credit Allowance
An outage credit allowance, equivalent to a pro-rata adjustment of the Lamp/Luminaire Charge for the period following the date of proper Company notice until the date the facility is operating, will be provided if the facility malfunction remains unresolved more than three (3) business days after the date proper notification was provided to the Company by the customer. Reference General Information, Section V.
2. Relocation of Existing Facilities
Company facilities that can be relocated will be limited to; overhead distribution, poles/standards, arms, brackets, luminaires, lamps and overhead circuitry. Pole replacements required for the installation of customer's lighting equipment shall be performed by Company or joint owner at customer's expense. Reference General Information, Section V.

G. Increase in Rates and Charges

Reference General Information, Section IV.

DETERMINATION OF BILLING:

Reference General Information, Section IV.

A. Minimum Charge

The application of charges as defined under RATE for the duration of the unexpired term, utilizing the billing quantities effective at the time of termination notice, plus any balance due for service rendered. Reference General Information, Section IV.

B. Determination of Billing Quantities

Reference General Information, Section IV.

C. Terms of Payment

Reference General Information, Section IV.

Received: 02/24/2012
Status: EFFECTIVE
Effective Date: 05/21/2012

SERVICE CLASSIFICATION NO. 1 (Continued)

D. Billing Discrepancies

1. Billing Discrepancy Notification
   Reference General Information, Section IV.

2. Customer Records
   Reference General Information, Section IV.

3. Adjustment of Previous Bills
   Reference General Information, Section IV.

4. Backbilling
   Reference General Information, Section IV.

TERM:

Reference General Information, Section IV.

A. Overhead Service

Term for overhead supplied service utilizing applicable facilities shall be a minimum of one (1) year.

B. Underground Service

Term for underground supplied service utilizing applicable facilities shall be a minimum of four (4) years.

Received: 01/31/2011
Status: EFFECTIVE
Effective Date: 02/01/2011

SERVICE CLASSIFICATION NO. 1 (Continued)

PROVISIONS:

A. General Provisions

The provisions designated in this section apply to all services of this tariff. The full definitions of the terms and conditions identified below are provided in General Information, Section IV.

1. Company Service Liability Disclaimer
   Reference General Information, Section IV.

2. Customer Equipment Liability Disclaimer
   Reference General Information, Section IV.

3. Electrical Supply Connections
   Reference General Information, Section IV.

4. Excessive Damage to Company Facilities
   Reference General Information, Section IV.

5. Extension of Company Distribution Facilities
   Reference General Information, Section IV.

6. Legislative Hierarchy
   Reference General Information, Section IV.

7. Lighting Design Liability Disclaimer
   Reference General Information, Section IV.

8. Maintenance of Customer Owned Equipment
   Reference General Information, Section IV.

9. Property Rights
   Reference General Information, Section IV.

10. Service Classification Revision
    Reference General Information, Section IV.

11. Service Jurisdiction
    Reference General Information, Section IV.

12. Service Limitations
    Reference General Information, Section IV.

Received: 02/24/2012
Status: EFFECTIVE
Effective Date: 05/21/2012

SERVICE CLASSIFICATION NO. 1 (Continued)

A. General Provisions (Continued)

1. Site Restoration
Reference General Information, Section IV.

2. Termination of Service
Reference General Information, Section IV.

3. Undergrounding of Electric Distribution System Infrastructure
Reference General Information, Section IV.

4. Vegetation Management
Reference General Information, Section IV.

B. Special Provisions

The provisions designated in this section are applicable to this service classification. The full definitions of the terms and conditions identified below are provided in General Information, Section V.

1. Ancillary Equipment
Reference General Information, Section V.

2. Attachments to Company Facilities
Reference General Information, Section V.

3. Facility/Equipment Obsolescence
Reference General Information, Section V.

4. Facility Service Limitation
Reference General Information, Section V.

5. Support Structures
Facilities provided under this service shall only be installed upon support facilities or structures owned and maintained by the Company.

Received: 02/24/2012
Status: EFFECTIVE
Effective Date: 05/21/2012

NIAGARA MOHAWK POWER CORPORATION d/b/a NATIONAL GRID
P.S.C. NO. 214 ELECTRICITY, S.C. NO. 1
FORM "PL" - APPLICATION FOR SERVICE

BY AND BETWEEN NIAGARA MOHAWK POWER CORPORATION AND

_____ _____ (hereafter called "Applicant")
(Applicant Name) (Mailing Address)

Date: _____ , _____

The UNDERSIGNED (hereinafter called "Applicant") hereby applies to NIAGARA MOHAWK POWER CORPORATION (hereinafter called "COMPANY") to supply outdoor lighting service upon premises located at:_____for and during the period of: "twelve months" for overhead supplied service, commencing on or about _____ and thereafter until canceled by either party as provided for in the Service Classification.

TYPE OF UNIT	*LAMP SIZE*	*FACILITY PRICE*	*VOLUMETRIC PRICE[1]*	*UNIT PRICE*	*QUANTITY*	*MONTHLY CHARGE[2]*
					TOTAL	

1 Volumetric Price includes; charges and adjustments as described in General Information, Section IV, Rate A (Volumetric Charges) and Rate B (Adjustments to Volumetric Charges), where applicable, and represents a monthly average of the annual price. Actual volumetric charges stated on the service bill will fluctuate monthly based on monthly volumetric energy consumption.
2 The monthly charge does not include Revenue Tax, Applicable Surcharges or Sales Tax which will be included in bills rendered, where applicable.

Received: 01/31/2011
Status: EFFECTIVE
Effective Date: 02/01/2011

SERVICE CLASSIFICATION NO. 1 (Continued)

Applicant agrees to observe and perform all rules and regulations of Company and to pay the rates provided in Service Classification No. 1 of P.S.C. No. 214 as set forth above and as the same may be from time to time changed, amended and/or supplemented.

Applicant Name _____

By _____ _____
(Signature) (Print Name)

_____ _____
(Title) (Date)

ACCEPTED:
NIAGARA MOHAWK POWER CORPORATION

By _____ _____
(Signature) (Print Name)

_____ _____
(Title) (Date)

Received: 01/31/2011
Status: EFFECTIVE
Effective Date: 02/01/2011

SERVICE CLASSIFICATION NO. 1 (Continued)

RESERVED FOR FUTURE USE

Received: 02/24/2012
Status: EFFECTIVE
Effective Date: 05/21/2012

SERVICE CLASSIFICATION NO. 2
STREET LIGHTING - UNMETERED
COMPANY OWNED / COMPANY MAINTAINED

APPLICABLE TO USE OF SERVICE FOR:

The lighting of streets, highways, roadways, and ways open to public use by vehicles or pedestrians in parks or other public places, for the State of New York, for municipal corporations, for duly constituted street lighting districts, and for duly constituted public agencies, public authorities and public corporations.

CHARACTER OF SERVICE:

Electric service is provided to Company owned, operated and maintained facilities at a designated service type, as defined below, by the Customer. Reference General Information, Section IV.

A. Overhead Service (OH)

Reference General Information, Section IV.

B. Underground Service (UG)

Reference General Information, Section IV.

C. Underground Residential Distribution Service (URD)

Underground Residential Distribution Service is available in those areas where the Company operates an underground distribution system at the appropriate service voltage to operate and/or support the facilities or equipment applicable in this service classification. Application of this service is limited to those locations absent of hardscape in the opinion of the Company. Eligibility for this service is conditioned upon the underground distribution system meeting the definition and requirements of Underground Distribution as set forth in Rule 16 of the Company's Electric Tariff and all other applicable terms and conditions.

APPLICATION FOR SERVICE:

The Company may require written application on the Company's Form "SL2", however, failure to execute a Form "SL2" shall not exempt the customer from paying all rates and charges provided herein. When required by the Company, Form "SL2" shall be executed by a duly authorized representative of the customer, to which shall be attached a schedule designated Schedule "SL2", listing the facilities to be supplied initially. Such application and attached schedule, when accepted by Company, shall constitute an agreement between customer and Company, subject to the terms and conditions set forth in this service classification. Except for extenuating circumstances or requirements, when accepted by the Company, there will be one Form "SL2" per customer that will constitute a single account and whereas multiple street lighting districts may be included within the single account. There shall be only one customer of record for a designated circuit of street lighting service and that customer is responsible for all terms and conditions set forth in this service classification provided however that failure to include any lighting facilities in the customer's Schedule "SL2" shall not exempt the customer from paying all rates and charges applicable hereunder to such facilities.

Received: 01/31/2011
Status: EFFECTIVE
Effective Date: 02/01/2011

SERVICE CLASSIFICATION NO. 2 (Continued)

FACILITY CLASSIFICATIONS:

A designation assigned to all company owned facilities that define the customer availability of the offering and the associated degree of Company maintenance or replacement.

A. Standard Facility

A facility offering that is available to all customers for new and existing installations and which the Company will provide full maintenance service and in-kind replacement. The Company will attempt to supply standard facilities that have a consistent aesthetic appearance to existing operational facilities. The Company may use facilities that from time to time experience design or production modifications and/or the utilization of alternate manufacturers.

B. Closed Facility

A facility offering that is available only to customers having installations with existing applications and which the Company will continue to provide full maintenance and in-kind replacement. Closed facilities are not available to new applicants or for new installations or as a replacement for existing installations utilizing other facilities.

C. Obsolete Facility

A facility offering that is no longer available for new applicants, new installations or in-kind replacement and which the Company will not provide continued maintenance service. Customers receiving service utilizing obsolete facilities are to provide the Company an authorization specifying a replacement plan designating facilities considered standard at the time or identify an alternate resolution consistent with an applicable service classification. Reference, General Information Section V, Special Provisions, Facility/Equipment Obsolescence for further application definition.

Received: 11/01/2016
Status: EFFECTIVE
Effective Date: 12/21/2016

SERVICE CLASSIFICATION NO. 2 (Continued)

RATE:

The charges presented below are applicable to all customers served by this service classification unless otherwise designated. The charge for service during each billing cycle shall be for facilities in service as of the first day of that billing cycle.

A. Volumetric Charges

1. Volumetric Energy Consumption
The cumulative energy consumed by the individual luminaires is determined by the aggregation of each luminaires' corresponding type and size of lamp or light source as identified below in Table 1, Lamp/Light Source Billable Wattages, multiplied by the prorated portion of the appropriate monthly hours of operation during the billing period as identified in Table 2, Hours of Operation, divided by 1,000 to yield kWh. Reference General Information, Section IV.

2. Billable Wattage
The billable wattages are presented in Table 1, below. Reference General Information, Section V.

Table 1 – Lamp/Light Source Billable Wattages

Lamp/Light Source Billable Wattages (Watts)

High Intensity Discharge Lamps (HID)

Lamp Type	Lamp Size (Watts)						
	70	100	150	175	250	400	1000
Mercury Vapor (MV)	-----	130	-----	211	-----	477	1095
High Pressure Sodium (HPS)	86	118	173	-----	304	470	1106
Metal Halide (MH)	-----	-----	-----	207	295	451	1078

Incandescent Lamps

Lamp Type	Lamp Size (Lumens)			
	2500	4000	6000	10000
Incandescent (INC)	202	327	448	690

Light Emitting Diode (LED)

Light Source	Illumination Output (Lumens)			
	B	**C**	**D**	**F**
	2001-4000	4001-8000	8001-14000	20001-30000

Luminaire Type	LED Luminaire Reference (Watts)			
	B	**C**	**D**	**F**
Roadway-LED	25	48	96	210

NOTE: LED Luminaire Reference (Watts) designation A and E are reserved for future use.

Effective 12/21/2016 under authority of PSC by Order made 12/15/2016 in Order Nu mber 16-E-0537

Received: 01/31/2011
Status: EFFECTIVE
Effective Date: 02/01/2011

SERVICE CLASSIFICATION NO. 2 (Continued)

3. Hours of Operation
Reference General Information, Section V.

Normal Hours of Operation
The monthly assignment of normal hours of operation is presented in Table 2, below. Reference General Information, Section V.

Continuous Hours of Operation
The monthly assignment of continuous hours of operation is presented in Table 2, below. Reference General Information, Section V.

Non-Standard Hours of Operation
Reference General Information, Section V.

Table 2 - Hours of Operation

Monthly Hours of Operation (Hours)

Months	Normal Operation	Continuous Operation
January	444	744
February*	368	672
March	362	744
April	305	720
May	275	744
June	246	720
July	264	744
August	301	744
September	334	720
October	393	744
November	421	720
December	457	744
Total	4170	8760
*Leap Year Adjustment		
February	381	696
Adjusted Leap Year Total	4183	8784

Received: 10/30/2015
Status: EFFECTIVE
Effective Date: 06/01/2016

SERVICE CLASSIFICATION NO. 2 (Continued)

4. Distribution Delivery Charge for all Load Zones, per kWh $0.08575

5. Company Supplied Electricity Supply Service Charges, per kWh
Reference General Information, Section IV.

B. Adjustment to Volumetric Charges

Reference General Information, Section IV.

C. Standard Facility Charges

The charges associated with the standard facility offerings presented below are applicable to all customers served by this service classification, when appropriate. The charge for facility service during each billing cycle shall be one-twelfth (1/12) of the applicable annual amounts set forth herein as of the first day of such billing cycle. The minimum facility charges for a lighting assembly at any installation location will consist of a lamp charge, a luminaire charge, or combination lamp/light source/luminaire charge and an applicable street light circuit charge.

1. Lamp Charge
The annual lamp charges per unit, without volumetric charges and adjustments, are presented below in Table 3. The lamp charges are determined by lamp or light source type and size. For continuous operation, the annual lamp charge (per unit) as presented in Table 3-Lamp Charge is multiplied by a factor of two (2).

Effective date postponed to 06/01/2016. See Supplement No. 26.

Received: 09/16/2016
Status: EFFECTIVE
Effective Date: 12/21/2016

SERVICE CLASSIFICATION NO. 2 (Continued)

Table 3 - Lamp Charge (Standard)

Annual Lamp Charge, per unit ($)

Lamp Type	Lamp Size (Watts)					
	70	100	150	175	250	400
High Pressure Sodium (HPS)	7.99	7.99	7.99	-----	8.17	8.17
Metal Halide (MH)	-----	-----	-----	56.31	56.31	50.82

1. Luminaire Charge
   The annual luminaire charges, per unit are presented below in Table 4. Luminaire charges are determined by luminaire type and lamp size (watts).

Table 4 - Luminaire Charge (Standard)

Annual Luminaire Charge, per unit ($)

Luminaire Type	Lamp Size (Watts)					
	70	100	150	175	250	400
Aspen Grove	103.70	103.70	81.67	81.67	-----	-----
Central Park	-----	126.46	-----	117.25	-----	-----
Coach	74.25	74.25	57.41	57.41	-----	-----
Delaware Park	-----	-----	199.34	199.34	246.07	246.07
Delaware Park Pedestrian	166.64	169.49	-----	199.34	-----	-----
Edgewater	-----	131.61	137.40	137.40	-----	-----
Edison	85.26	85.26	67.63	-----	-----	-----
Floodlight	-----	-----	-----	-----	58.42	61.49
Roadway	53.65	53.65	54.81	54.81	63.01	63.01
Setback	-----	-----	-----	-----	110.53	104.35
Shoebox	60.52	64.10	49.53	-----	86.21	86.21
Traditional	49.85	49.85	39.43	39.43	-----	-----
Underpass	84.62	86.36	87.24	82.36	60.91	-----
Williamsville	99.20	99.20	119.09	119.09	-----	-----

Table 4.1 – Light Source/Luminaire Charge (Standard)

Annual Light Source/Luminaire Charge, per unit ($)

Luminaire Type/Light Source	LED Luminaire Reference			
	B	**C**	**D**	**F**
Roadway-LED	83.83	88.52	110.09	119.16

NOTE: LED Luminaire Reference (Watts) designation A and E are reserved for future use.

Issued by Kenneth D. Daly, President, Syracuse, NY

Effective 12/21/2016 under authority of PSC by Order made 12/15/2016 in Order Nu mber 16-E-0537

Received: 07/01/2015
Status: EFFECTIVE
Effective Date: 08/01/2015

SERVICE CLASSIFICATION NO. 2 (Continued)

1. Pole/Standard Charge
The annual pole or standard charges per unit are presented below in Table 5. The pole/standard charges are determined by the type of pole or standard material and its height.

Table 5 - Pole/Standard Charge (Standard)

Annual Pole/Standard Charge, per unit

Pole/Standard Type	Annual Charge ($)
Pole – for OH Service	
Wood - distribution (existing)	No Charge
Wood - street lighting (existing, includes one (1) span)	No Charge
Concrete – distribution, Metropolitan	No Charge
Concrete – street lighting (includes one (1) span), Metropolitan	270.38
Electric distribution system addition/extension	See General Provisions
Standard – (over 16 ft.), for UG or URD Service	
Aluminum – anchor base (AB)	252.75
Aluminum – anchor base (AB, heavy duty)	299.48
Aluminum – anchor base (AB, square)	511.22
Fiberglass – anchor base (AB)	172.69
Standard – (16 ft. and under), for UG or URD Service	
Aluminum – anchor base (AB), Villager	111.80
Fiberglass – anchor base (AB)	67.14
Fiberglass – direct embedded (DE)	92.28
Decorative Standard – (over 16 ft.), for UG Service	
Aluminum – anchor base (AB), Niagara Roadway	647.90
Decorative Standard – (16 ft. and under), for Standard UG or URD Service	
Aluminum – anchor base (AB), Armory Square	335.46
Fiberglass – anchor base (AB), Presidential	156.49
Accessory	
Standard - tenon mounting adaptor	43.20

Received: 07/01/2015
Status: EFFECTIVE
Effective Date: 08/01/2015

SERVICE CLASSIFICATION NO. 2 (Continued)

4. Arm/Bracket Charge
The annual arm and bracket charges per unit are presented below in Table 6. The arm and bracket charges are determined by the type of standard or pole to which it is attached.

Table 6 - Arm/Bracket Charge (Standard)

Annual Arm/Bracket Charge, per unit

Arm/Bracket Type	Annual Charge ($)
Arm – Standard (over 16 ft.)	
Roadway – aluminum, all types/sizes	No Charge
Decorative – Niagara Pedestrian, single	188.97
Floodlight – aluminum, all types/sizes	No Charge
Arm – Standard (16 ft. and under)	
Decorative Crossarm – Contemporary	102.47
Decorative Crossarm – Ornamental	102.47
Bracket - Wood Pole	
Roadway – aluminum, all types/sizes	No Charge
Decorative – Park Ave. South, single	105.37
Floodlight – aluminum, all types/sizes	No Charge
Bracket – Concrete Pole (Metropolitan)	
Roadway – aluminum, all types/sizes, distribution	No Charge
Roadway – aluminum, all types/sizes, street lighting	No Charge
Decorative – Tear Drop, all types/sizes, distribution	70.30
Decorative – Tear Drop, all types/sizes, street lighting	No Charge

5. Base Charge
The annual base charges per unit are presented below in Table 7. The base charges are determined by their type.

Table 7 - Base Charge (Standard)

Annual Base Charge per unit

Base Type	Annual Charge ($)
Support	
Frangible	No Charge
Non-frangible	No Charge
Decorative	
Niagara	288.32
Metropolitan	151.41

Received: 02/27/2015
Status: EFFECTIVE
Effective Date: 04/01/2015

SERVICE CLASSIFICATION NO. 2 (Continued)

6. Foundation Charge
The annual foundation charges per unit are presented below in Table 8. Foundation charges are determined by foundation type and size of standard it supports.

Table 8 - Foundation Charge (Standard)

Annual Foundation Charge per unit

Foundation Type	Annual Charge ($)
Concrete – Cast-In-Place (CIP)	
For anchor base standard – (over 16 ft.)	215.44
For anchor base standard – (over 16 ft.), heavy duty	215.44
For anchor base standard – (16 ft. and under)	215.44
Concrete – Pre-Cast (PC)	
For anchor base standard – (over 16 ft.)	215.44
For anchor base standard – (16 ft. and under)	215.44

7. Street Light Circuit Charge
The annual street light circuit charges per unit are presented below in Table 9. Street light circuit charges are compliant with the standard types of service. The Company will provide the engineering, design, configuration and alignment of the street light circuit facilities.

Typically the OH street light service utilizes the distribution system secondary supply conductors as the electrical source.

In both the UG and URD services, the street light cables (wires) are independent of the underground distribution cables.

Received: 02/27/2015
Status: EFFECTIVE
Effective Date: 04/01/2015

SERVICE CLASSIFICATION NO. 2 (Continued)

Table 9 - Street Light Circuit Charge (Standard)

Annual Street Light Circuit Charge per unit

Street Light Circuit Type	Annual Charge ($)
Overhead	
Overhead Service (OH)	No Charge
Electric distribution system addition/extension	See General Provisions
Underground	
Underground service (UG) - the first 50 feet or less per pole; or, for installations made prior to the effective date of this schedule, such greater footage as was supplied under the superseded schedule without an excess circuit charge:	
1. Cable and conduit	118.26
2. Cable only, where conduit is supplied by customer	118.26
3. Direct buried cable	118.26
Underground Residential Distribution service (URD) - the first 10 feet or less per pole; or, for installations made prior to the effective date of this schedule, such greater footage as was supplied under the superseded schedule without an excess circuit charge:	87.98
Excess footage of circuit, for both UG and URD, above, per foot:	
l. Cable and conduit	No Charge
2. Cable only, where conduit is supplied by customer	No Charge
3. Direct buried cable	No Charge

8. Convenience Outlet Charge

Convenience (festoon) receptacle outlets, located on lighting facilities or wood poles, per the written request of the customer for the purpose of providing auxiliary, unmetered, 120VAC electric service. The customer responsible for the convenience outlet facility charge is the responsible party for all energy related charges. The energy (kWh) used through the convenience outlet(s) is billed separately under an appropriate service classification as provided within the Company's Electric Tariff. Table 10 presents the annual facility charges per unit for the three (3) types of convenience outlet applications.

Table 10 - Convenience Outlet Charge (Standard)

Annual Convenience Outlet Charge, per unit

Type of Convenience Outlet	Annual Charge ($)
Metal, Concrete or Composite Standards	
Outlet Installed On New Standard	47.71
Outlet Installed On Existing Standard	65.99
Wood Pole	
All applications	59.86

Received: 02/27/2015
Status: EFFECTIVE
Effective Date: 04/01/2015

SERVICE CLASSIFICATION NO. 2 (Continued)

D. Closed Facility Charges

The charges associated with the closed facilities presented below are applicable to those customers having such facilities in service. The charge for facility service during each billing cycle shall be one-twelfth (1/12) of the applicable annual amounts set forth herein as of the first day of such billing cycle. Additional charges or credits are provided for in the applicable sections of this service classification.

1. Lamp/Luminaire Charge
The closed annual lamp/luminaire charge per unit, without volumetric charges and adjustments, are presented below in Table 11. Lamp/Luminaire charges are determined by lamp type and size (watts) and luminaire type.

Table 11 - Lamp/Luminaire Charge (Closed)

Annual Lamp/Luminaire Charge, per unit

Lamp Type	Lamp Size (Watts)	Luminaire Type	Annual Charge ($)
High Pressure Sodium (HPS)	1000	High-Mast (6 unit)	1,014.94

2. Lamp Charge
The closed annual lamp charge per unit, without volumetric charges and adjustments, are presented below in Table 12. The lamp charges are determined by lamp type and size.

Table 12 - Lamp Charge (Closed)

Annual Lamp Charge, per unit ($)

Lamp Type	Lamp Size (Watts)						
	70	100	150	175	250	400	1000
High Pressure Sodium (HPS)	-----	-----	-----	-----	-----	-----	16.43
Metal Halide (MH)	-----	-----	-----	-----	-----	-----	54.36

3. Luminaire Charge
The closed annual luminaire charges per unit are presented below in Table 13. Luminaire charges are determined by luminaire type and lamp size (watts).

Received: 02/27/2015
Status: EFFECTIVE
Effective Date: 04/01/2015

SERVICE CLASSIFICATION NO. 2 (Continued)

Table 13 - Luminaire Charge (Closed)

Annual Luminaire Charge, per unit ($)

Luminaire Type	Lamp Size (Watts)						
	70	100	150	175	250	400	1000
Franklin Square	-----	136.52	136.52	136.52	-----	-----	-----
Little Falls – Post Top	126.47	-----	-----	-----	-----	-----	-----
Little Falls – Teardrop	154.97	-----	-----	-----	-----	-----	-----
Roadway	-----	-----	-----	-----	-----	-----	126.21
Shoebox	-----	-----	-----	-----	-----	-----	151.05
Underpass	-----	-----	-----	-----	60.91	-----	-----
Washington	-----	133.75	-----	-----	-----	-----	-----

4. Pole/Standard Charge
The closed annual pole or standard charges per unit are presented below in Table 14. The pole/standard charges are determined by the type of pole or standard, material and its height.

Table 14 - Pole/Standard Charge (Closed)

Annual Pole/Standard Charge, per unit

Pole/Standard Type	Annual Charge ($)
Standard – (16 ft. and under), for UG or URD Service	
Aluminum – anchor base (AB, square)	140.08
Decorative Standard – (16 ft. and under), for UG or URD Service	
Aluminum – anchor base (AB), Little Falls	197.73

Received: 02/27/2015
Status: EFFECTIVE
Effective Date: 04/01/2015

SERVICE CLASSIFICATION NO. 2 (Continued)

5. Arm/Bracket Charge
The closed annual arm and bracket charges per unit are presented below in Table 15. The arm and bracket charges are determined by the type of standard or pole to which it is attached.

Table 15 - Arm/Bracket Charge (Closed)

Annual Arm/Bracket Charge, per unit

Arm/Bracket Type	Annual Charge ($)
Arm – Standard (over 16 ft.)	
Roadway – steel, all types/sizes	No Charge
Arm – Standard (16 ft. and under)	
Decorative (cane with scroll) – Little Falls	110.53
Bracket - Wood Pole	
Roadway – steel, all type/sizes	No Charge

6. Foundation Charge
The closed annual foundation charges per unit are presented below in Table 16. Foundation charges are determined by foundation type and size of standard it supports.

Table 16 - Foundation Charge (Closed)

Annual Foundation Charge, per unit

Foundation Type	Annual Charge ($)
Concrete – Cast-In-Place (CIP)	
For anchor base standard – (over 16 ft.), double size	215.44
For anchor base standard – (over 16 ft.), extra heavy duty	215.44

E. Obsolete Facility Charges

The charges associated with obsolete facilities presented below are applicable to those customers having such facilities in service. The charge for facility service during each billing cycle shall be one-twelfth (1/12) of the applicable annual amounts set forth herein as of the first day of such billing cycle. Additional charges or credits are provided for in the applicable sections of this service classification.

1. Lamp/Luminaire Charge
The obsolete annual lamp/luminaire charges per unit, without volumetric charges and adjustments, are presented below in Table 17. Lamp/Luminaire charges are determined by lamp type and size (watts) and luminaire type.

Received: 02/27/2015
Status: EFFECTIVE
Effective Date: 04/01/2015

SERVICE CLASSIFICATION NO. 2 (Continued)

Table 17 - Lamp/Luminaire Charge (Obsolete)

Annual Lamp/Luminaire Charge, per unit

Lamp Type	Lamp Size	Luminaire Type	Annual Charge ($)
Incandescent	<2,500 lumen	Open Reflector	74.80
	<2,500 lumen	Standard Luminaire	96.86
	4,000 lumen	Enclosed	99.92
Mercury Vapor (MV)	100 watt	Open Reflector	87.38

2. Lamp Charge
The obsolete annual lamp charges per unit, without volumetric charges and adjustments, are presented below in Table 18. The lamp charges are determined by lamp type and size.

Table 18 - Lamp Charge (Obsolete)

Annual Lamp Charge, per unit ($)

Lamp Type	Lamp Size (Watts)						
	70	100	150	175	250	400	1000
Mercury Vapor (MV)	-----	6.84	-----	6.84	-----	7.21	13.08

3. Luminaire Charge
The obsolete annual luminaire charges per unit are presented below in Table 19. Luminaire charges are determined by luminaire type and lamp size (watts).

Table 19 - Luminaire Charge (Obsolete)

Annual Luminaire Charge, per unit ($)

Luminaire Type	Lamp Size (Watts)						
	70	100	150	175	250	400	1000
Contemporary	79.27	79.27	64.66	64.66	-----	-----	-----

4. Pole/Standard Charge
The obsolete annual pole or standard charges per unit are presented below in Table 20. The pole/standard charges are determined by the type of pole or standard, material and its height.

Received: 07/01/2015
Status: EFFECTIVE
Effective Date: 08/01/2015

SERVICE CLASSIFICATION NO. 2 (Continued)

Table 20 - Pole/Standard Charge – (Obsolete)

Annual Pole/Standard Charge, per unit

Pole/Standard Type	Annual Charge ($)
Standard – (over 16 ft.), for OH Service	
Steel – anchor base (AB)	177.77
Aluminum – anchor base (AB)	181.79
Standard – (over 16 ft.), for UG or URD Service	
Steel – anchor base (AB, 50 ft. round)	323.69
Steel – anchor base (AB, 35 ft. square)	183.43
Steel – anchor base (AB)	260.34
Steel – anchor base (AB, heavy duty)	308.47
Steel – anchor base (AB, traffic signal, single arm)	478.48
Standard – (16 ft. and under), for UG or URD Service	
Steel – anchor base (AB)	111.80
Steel – direct embedded (DE)	131.73
Decorative Standard – (16 ft. and under), for UG or URD Service	
Cast Iron – anchor base (AB), Armory Square	372.86
Fiberglass – direct embedded (DE), Presidential	229.96

5. Foundation Charge
The obsolete annual foundation charge per unit is presented below in Table 21. Foundation charges are determined by foundation type and size of standard it supports.

Table 21 - Foundation Charge- (Obsolete)

Annual Foundation Charge, per unit

Foundation Type	Annual Charge ($)
Mechanical - Screw Type (ST)	
For anchor base standard – all applications	110.11

Received: 02/27/2015
Status: EFFECTIVE
Effective Date: 04/01/2015

SERVICE CLASSIFICATION NO. 2 (Continued)

6. Convenience Outlet Charge
The obsolete annual convenience (festoon) outlet charge per unit is presented as follows:

Convenience (festoon) Outlet – Old	5.55

7. Pricing Exception Charge
The obsolete annual pricing exception charges per unit, without volumetric charges and adjustments, are presented below in Table 22. The following annual charges represent values specific to facility combinations established prior to the effective date of this Tariff. This listing will be amended hereafter to reflect changes in the number of units or the type of facilities listed. The number and types of units listed herein, are the number and types in service as of January 1, 2015.

Table 22 - Pricing Exception Charge – (Obsolete)

Received: 02/27/2015
Status: EFFECTIVE
Effective Date: 04/01/2015

SERVICE CLASSIFICATION NO. 2 (Continued)

Western Division

Annual Pricing Exception Charges, per unit

Pricing Exception Service Location	No. of Units	Annual Charge ($)
Amherst Central School District No. 1		
1. Company owned Foundation (concrete), Cable & Conduit (UG supplied)	4	159.68
Town of Amherst		
1. Company owned Cable & Conduit (UG supplied)	742	64.32
2. Company owned Cable (UG supplied)	37	15.84
3. Company owned Foundation (concrete), Cable & Conduit (UG supplied)	443	100.07

Received: 02/27/2015
Status: EFFECTIVE
Effective Date: 04/01/2015

SERVICE CLASSIFICATION NO. 2 (Continued)

Western Division (Continued)

Annual Pricing Exception Charges, per unit

Pricing Exception Service Location	No. of Units	Annual Charge ($)
City of Buffalo		
1. Company owned Foundation (concrete), Cable & Conduit (UG supplied)	596	81.23
2. Company owned Foundation (concrete), Cable & Conduit (UG supplied)	17	111.68
3. Company owned Foundation (concrete), Cable & Conduit (UG supplied)	127	133.10
4. Company owned Cable & Conduit (UG supplied)	2,348	40.34
5. Company owned Cable & Conduit (UG supplied)	1,173	86.19
6. Company owned Foundation (concrete)	39	24.89
7. Company owned Foundation (concrete)	1,051	45.78
8. Company owned Foundation (concrete)	609	40.86
Chautauqua Utility District		
1. Company owned 1000L Lamp/Luminaire (open), (OH supplied)	63	73.55
2. Wood Pole	79	25.97
Village of Kenmore		
1. Company owned Cable & Conduit (UG supplied)	1054	43.00
Town of Tonawanda		
1. Company owned Cable & Conduit (UG supplied)	249	69.57
2. Company owned Foundation (concrete), Cable & Conduit (UG supplied)	1,100	94.36
Village of Williamsville		
1. Company owned Cable & Conduit (UG supplied)	104	73.76

Received: 02/27/2015
Status: EFFECTIVE
Effective Date: 04/01/2015

SERVICE CLASSIFICATION NO. 2 (Continued)

Central Division

Annual Pricing Exception Charge, per unit

Pricing Exception Service Location	No. of Units	Annual Charge ($)
City of Syracuse		
1. Company owned Standard (steel), Foundation (concrete), Cable & Conduit (UG supplied)	497	89.00
2. Company owned Foundation (concrete), Cable & Conduit (UG supplied)	50	73.12
State of New York, Syracuse Armory		
1. Company owned Foundation (concrete), Cable & Conduit (UG supplied)	4	163.66
City of Utica		
1. Company owned 4000L Lamp/Luminaire (enclosed), Standard (steel), Foundation (concrete), Cable & Conduit (UG supplied)	8	207.81

Eastern Division

Annual Pricing Exception Charge, per unit

Pricing Exception Service Location	No. of Units	Annual Charge ($)
City of Schenectady		
1. Company owned 2500L Lamp/Luminaire (enclosed), Standard (steel), Foundation (concrete), Cable & Conduit (UG supplied)	24	171.32
Village of Kinderhook		
1. Company owned 1000L Lamp/Luminaire (incandescent-open)	31	81.06
2. Company owned 1000L Lamp/Luminaire (incandescent-open), Cable & Conduit (UG supplied)	2	89.55
Town of Queensbury		
1. Company owned Standard (steel), Foundation (concrete), Cable & Conduit (UG supplied)	26	176.28

Received: 03/29/2013
Status: EFFECTIVE
Effective Date: 04/01/2013

SERVICE CLASSIFICATION NO. 2 (Continued)

F. Other Charges and Credits

Reference General Information, Section V.

1. Outage Credit Allowance

An outage credit allowance of thirty cents ($0.30) per lamp per night will be provided following the customer's proper notice to the Company of the luminaire malfunction (outage). The outage credit allowance will be provided for the period following the date of proper Company notice until the date the facility is operating. Reference General Information, Section V.

2. Lighting Service Charge

Reference General Information, Section V.

Lighting Service Charge, per occurrence $129.15

3. Relocation of Existing Facilities

Company facilities that can be relocated will be limited to; overhead distribution, poles/standards, arms, brackets, luminaires, lamps and overhead circuitry. Relocation limitations for specific facilities are as defined below or as otherwise acceptable to the Company. Reference General Information, Section V.

a. Overhead sourced facilities are to be within a ½ mile radius of the current location.
b. Underground sourced facilities are to be along the existing underground street lighting circuit.

4. Temporary Operation Discontinuance ("Red Cap")

The temporary electrical disconnection (temporary turn-off) of any luminaire(s) and associated lamp(s) as designated by the customer will be in compliance with the following conditions.

A customer must request in writing and the Company may mutually agree to the application of the temporary operation discontinuance ("Red Cap") service of a specific light(s) location, the type and wattage of the respective lamp(s), the period duration (in billing cycles) and any conditions that facilitate and /or contribute to the modified operation schedule. The minimal duration of the non-standard hours of operation condition is twelve (12) consecutive billing cycles and the maximum duration will be thirty-six (36) consecutive billing cycles, (unless the Company mutually agrees to a customer's written request for term modification or extension). The temporary operation discontinuance will be administered in increments of complete billing cycles. A limitation of no greater than ten (10) percent of the number of lamps within a customer's bill account will be affected by the temporary operation discontinuance service during a given billing cycle. Any facilities exceeding the maximum duration as defined for this service will be considered for elimination and subject to the application of Permanent Discontinuance, as defined under RATE, Section F.7.

The Lighting Service charge is applicable for each Customer requested installation or removal occurrence of this discontinuance as defined under Terms and Conditions Applicable to Specific Service Classifications, Other Charges and Credits, Section F.2.

The customer is responsible for all applicable charges during the temporary operation discontinuance billing cycle(s) including the following adjustments:

a. Monthly volumetric cost in accordance with Volumetric Charges, Hours of Operation, A.3, Table 2-Monthly Hours of Operation of RATE, will be adjusted to zero (0) and,
b. Annual lamp charges as defined in Standard Facility Charges, Lamp Charge, C.1, Table 3-Annual Lamp Charge of RATE, for the type and size of lamp affected by the temporary operation discontinuance will be adjusted to zero (0) and,
c. Remaining facility charges will be the responsibility of the customer as outlined in applicable sections of RATE for the duration of the temporary operation discontinuance.

Received: 06/17/2013
Status: EFFECTIVE
Effective Date: 07/19/2013

SERVICE CLASSIFICATION NO. 2 (Continued)

5. Temporary Customer Discontinuance
A customer may request in writing and the Company may mutually agree to the temporary customer discontinuance service of Company facilities at a specific light(s) location for a short duration of consecutive days up to one (1) billing cycle to accommodate the customer's replacement or maintenance of equipment. The Company will de-energize and remove all specified above grade facilities and following the stated duration, reinstall the same facility (unless the facility is considered by the Company as closed or obsolete). The Company
will make temporary electric system reconfigurations to maintain service to unaffected street light locations as necessary at customer's expense. The customer will continue to pay all charges for the duration of the temporary customer discontinuance except as defined in Other Charges and Credits, Temporary Operation Discontinuance, F.4 of RATE. Any facilities removed and not reinstalled will be considered eliminated and subject to the application of Permanent Discontinuance, as defined under RATE, Section F.7.

The Lighting Service charge is applicable for each Customer requested installation or removal occurrence of this discontinuance as defined under Terms and Conditions Applicable to Specific Service Classifications, Other Charges and Credits, Section F.2.

6. Temporary Facility Discontinuance
A customer may request in writing and the Company may mutually agree to the temporary discontinuance of Company facilities at a specific light(s) location for a duration of not less than one (1) billing cycle and not greater than twelve (12) consecutive billing cycles. The customer is responsible for the full reimbursement of all costs incurred by the Company including, but not limited to labor, material, transportation, equipment, adders and general and administration expenses associated with the temporary discontinuance of Company facilities. The Company will de-energize and remove all specified above grade facilities and following the stated duration, reinstall the same facility (unless the facility is considered by the Company as closed or obsolete) when designated by the customer. The Company will make temporary electric system reconfigurations to maintain service to unaffected street light locations as necessary at customer's expense. The customer will continue to pay all charges for the duration of the temporary discontinuance except as defined in Other Charges and Credits, Temporary Operation Discontinuance, F.4 of RATE. A limitation of no greater than ten (10) percent of the number of lamps as defined in the customer's bill account can be affected by temporary facility discontinuance during a given billing cycle. Any facilities removed and not reinstalled will be considered eliminated and subject to the application of Permanent Discontinuance, as defined under RATE, Section F.7.

Received: 10/24/2016
Status: EFFECTIVE
Effective Date: 11/01/2016

SERVICE CLASSIFICATION NO. 2 (Continued)

7. Permanent Discontinuance

Upon not less than 90 days' prior written notice to Company, customer may request that any Facility be discontinued permanently. Company shall have the right to remove or retire-in-place the designated Facility(s). The customer is required to compensate the Company for the Facility(s) to be permanently discontinued. The compensation is specific to the Facility(s) to be permanently discontinued and is comprised of three individual financial components; asset valuation, removal cost and system reconfiguration costs.

a. Asset valuation shall be determined based upon the applicable tax area asset category average of the Facility(s) undepreciated book value, less any Facility(s) salvage value based upon the Company's plant records.

b. Removal cost shall include all, but not be limited to, labor, material, transportation, administrative and general expenses, site restoration and other charges and adders applicable thereto. In the event permanently discontinued company Facilities are replaced with other company Facilities at the same time, the removal cost may be waived. Company-owned HID Luminaires that are replaced with Company-owned LED Light Source/Luminaire Facilities will not require the customers to pay system removal costs.

c. System reconfiguration costs, if necessary, shall include, but not be limited to, all labor, material, transportation, administrative and general expenses and other charges and adders for the Company to perform any electric system reconfigurations required to maintain service to unaffected street light locations. In situ replacement of Company-owned HID Luminaires with Company-owned LED Light Source/Luminaire Facilities will not require the customer to pay system reconfiguration costs.

Received: 10/24/2016
Status: EFFECTIVE
Effective Date: 11/01/2016

SERVICE CLASSIFICATION NO. 2 (Continued)

8. Purchase of Company-Owned Street Lights

Any municipality or other government entity desiring to purchase part or all the Company's street lights used to serve that customer may inform the Company of its interest in purchasing those street lights as provided herein:

a. Not more than once in any twelve-month period, the customer may submit a request to the Company in writing for a determination of the price at which the Company would agree to sell the greater of: (i) ten (10) percent or more of the street lights providing service to the customer under this Tariff; or (ii) 100 lights, in both cases exclusive of any supporting infrastructure, associated electric circuitry and any such Facilities used by the Company to serve other customers.

If a municipality has less than 100 lights owned by the utility, it will be required to purchase all of the lights.

b. Within ninety (90) days of receipt of the customer's written request, the Company shall provide the customer with a proposed price for the sale of such street lights to the customer, which price shall be determined by the Company taking into account factors which may include, but are not limited to, the fair value of the street lights to be sold, the remaining book value of the street lights to be sold, potential income tax implications, and any other costs which the Company may incur to complete the sale, which shall not include the cost of any field survey of the street lights in question unless specifically requested by the customer.

c. This pricing proposal shall also: (i) include the Company's total original cost, depreciation and net book value for the street lights in question; (ii) include an explanation of how the proposed sales price was determined; (iii) provide the cost the Company would charge to convert the street lights in question to LED prior to sale under its existing tariff provisions; and (iv) remain open for a minimum of 180 days.

Received: 10/24/2016
Status: EFFECTIVE
Effective Date: 11/01/2016

SERVICE CLASSIFICATION NO. 2 (Continued)

d. If the customer and the Company reach agreement as to the price and other terms and conditions under which the customer will purchase part or all of the Company's street lights as provided herein, the customer and the Company will enter into the following agreements to effectuate the sale of such street lights:

   1. A purchase and sale agreement to be approved by the PSC under §70 of the Public Service Law providing, among other things, that the street lights in question are sold on an "as is, where is" basis with no representations or warranties of any kind. The purchase and sale agreement shall require the customer to install electric disconnection equipment complying with Company standards on all of the street lights acquired by the customer within twenty-four (24) months and shall also require the customer to provide the Company with firm security in a form acceptable to the Company for the Company's estimate of its cost of performing such work, inclusive of all applicable overheads and adders.

   2. An attachment agreement authorizing the customer to attach its street lights to the Company's poles, wires and other electric infrastructure.

   3. A service agreement between the customer and the Company providing for the supply of electricity to be used in such street lights under the applicable provisions of this Tariff or the Company's General Electric Tariff.

e. The Company shall file any purchase and sale agreement entered into between the Company and the customer with the Commission under PSL §70 no later than sixty (60) days after its date of execution.

f. Ownership of the street lights in question will transfer from the Company to the customer upon the latter of:

   1. the execution and delivery of the purchase and sale agreement;

   2. the approval of the purchase and sale agreement by the PSC;

   3. the payment by the customer of the purchase price established in the purchase and sale agreement and the provision by the customer of firm security for any Separation Work that the customer elects to have performed by any entity other than the Company; and

   4. the execution and delivery of the other agreements contemplated in subpart (d) of this Rule.

Received: 10/24/2016
Status: EFFECTIVE
Effective Date: 11/01/2016

SERVICE CLASSIFICATION NO. 2 (Continued)

g. Nothing herein shall require the Company to transfer to the customer any of its interests in real property or to obtain any interests in real property or other licenses or permits on the customer's behalf. To the extent that the customer will require any such interests as a result of its acquisition of street lights under this Rule, the customer shall be solely responsible for obtaining such rights.

h. The Company shall release the security provided by the customer upon receipt of proof acceptable to the Company that electric disconnection devices acceptable to the Company have been installed on all of the street lights acquired by the customer. If all such work has not been completed within twenty-four (24) months of the execution of the purchase and sale agreement, the Company may at its option elect to notify the customer of its intention to perform such work on the customer's behalf. Upon completion of such work, the Company shall determine its actual costs of performing such work, inclusive of all applicable overheads and adders, and shall invoice the customer for that amount. If any invoice issued by the Company for such work is not paid within thirty (30) days, the Company may draw on the firm security provided by the customer for such purposes and shall either release any security amounts in excess of such costs or shall include any remaining costs of such work in its bills to the customer for street lighting service. Upon timely payment of the full amount of any such invoice, or upon receipt of proof that such work has been performed by the Customer or its contractor, the Company shall promptly release any security provided by the customer.

i. Customers purchasing part or all of the Company's street lighting systems must provide that any personnel that work on such street lighting systems will be qualified by complying with established regulations and standards associated with the work to be conducted. To identify requirements related to safety or the construction, repair, or maintenance of the street lighting system, the owner(s) should consult among other documentation, the Occupational Health and Safety Administration ("OSHA") requirements, including but not limited to OSHA 1910.269, "The Electric Power Generation, Transmission, and Distribution" standard, the National Electrical Code ("NEC"), the National Electric Safety Code ("NESC"), the New York State Labor Law governing how close workers (qualified) and non-workers (unqualified) can get to energized equipment at primary and/or secondary voltages, and requirements by the New York State Department of Transportation.

Received: 10/24/2016
Status: EFFECTIVE
Effective Date: 11/01/2016

SERVICE CLASSIFICATION NO. 2 (Continued)

Notwithstanding the provisions of this Section 8, the customer may file an application with the PSC at any time to determine if there is public interest for the PSC to commence a proceeding to facilitate the sale by the Company to the customer of all of the Company's street lights serving the customer, other than Facilities used by the Company to serve other customers. Any such petition must comply with the requirements of § 70-a of the Public Service Law and with the requirements of the PSC's Rules of Procedure, 16 N.Y.C.R.R. Part 3, and any other applicable requirements, all as modified and in effect from time to time.

Nothing in this Section 8 shall prevent the Company from agreeing to sell less than the minimum amount of street lights specified in Section 8.a serving any customer, subject to the approval of the PSC under §70 of the Public Service Law.

Received: 02/22/2016
Status: EFFECTIVE
Effective Date: 11/01/2016

SERVICE CLASSIFICATION NO. 2 (Continued)

G. Increase in Rates and Charges

Reference General Information, Section IV.

DETERMINATION OF BILLING:

Reference General Information, Section IV.

A. Minimum Charge

1. Unexpired Term
The application of charges as defined under RATE for the duration of the unexpired term, utilizing the billing quantities effective at the time of termination notice, plus any balance due for service rendered. Reference General Information, Section IV.

2. Termination
The application of Permanent Discontinuance as defined under RATE, Other Charges and Credits, utilizing the billing quantities effective at the time of termination notice. Reference General Information, Section IV.

B. Determination of Billing Quantities

Reference General Information, Section IV.

C. Terms of Payment

Reference General Information Section IV.

D. Billing Discrepancies

1. Billing Discrepancy Notification:
Reference General Information, Section IV.

2. Customer Records
Reference General Information, Section IV.

3. Adjustment of Previous Bills
Reference General Information, Section IV.

4. Backbilling
Reference General Information, Section IV.

Effective 11/01/2016 under authority of PSC by Order made 10/14/16 in Order Numb er 15-E-0747
Effective date postponed to 12/01/2016. See Supplement No. 30.

Received: 02/24/2012
Status: EFFECTIVE
Effective Date: 05/21/2012

SERVICE CLASSIFICATION NO. 2 (Continued)

TERM:

Reference General Information, Section IV.

A. Overhead Service

Term for overhead supplied service utilizing applicable facilities shall be a minimum of one (1) year.

B. Underground Service

Term for underground supplied service utilizing applicable facilities shall be a minimum of five (5) years.

PROVISIONS:

A. General Provisions

The provisions designated in this section apply to all services of this tariff. The full definitions of the terms and conditions identified below are provided for in General Information, Section IV.

1. Company Service Liability Disclaimer
   Reference General Information, Section IV.

2. Customer Equipment Liability Disclaimer
   Reference General Information, Section IV.

3. Electrical Supply Connections
   Reference General Information, Section IV.

4. Excessive Damage to Company Facilities
   Reference General Information, Section IV.

5. Extension of Company Distribution Facilities
   Reference General Information, Section IV.

6. Legislative Hierarchy
   Reference General Information, Section IV.

7. Lighting Design Liability Disclaimer
   Reference General Information, Section IV.

Received: 02/24/2012
Status: EFFECTIVE
Effective Date: 05/21/2012

SERVICE CLASSIFICATION NO. 2 (Continued)

A. General Provisions (Continued)

8. Maintenance of Customer Owned Equipment
Reference General Information, Section IV.

9. Property Rights
Reference General Information, Section IV.

10. Service Classification Revision
Reference General Information, Section IV.

11. Service Jurisdiction
Reference General Information, Section IV.

12. Service Limitations
Reference General Information, Section IV.

13. Site Restoration
Reference General Information, Section IV.

14. Termination of Service
Reference General Information, Section IV.

15. Undergrounding of Electric Distribution System Infrastructure
Reference General Information, Section IV.

16. Vegetation Management
Reference General Information, Section IV.

B. Special Provisions

The provisions designated in this section are applicable to this service classification. The full definitions of the selected provisions identified below are provided for in General Information, Section V.

1. Ancillary Equipment
Reference General Information, Section V.

2. Attachments to Company Facilities
Reference General Information, Section V.

Received: 04/27/2016
Status: EFFECTIVE
Effective Date: 06/01/2016

SERVICE CLASSIFICATION NO. 2 (Continued)

B. Special Provisions (Continued)

3. Authorization of Additional Facilities
Additional facilities considered standard at the time of the customer's request will be allowed at locations designated by the customer provided the Company, in its sole discretion, can reasonably supply the requested electric service and facilitate the safe operation and maintenance of the requested facilities. The Company may require the customer to make it's request on appropriate customer letterhead, including;
   a. A revised Schedule "SL2",
   b. An approved form resolution, as applicable,
   c. A signature by a duly authorized representative of the customer.

Upon completion of field work, the Schedule "SL2" will be appended to the customer's Form "SL2" Contract, Application for Service and applicable billing changes commenced.

4. Change of Existing Company Facilities
The change or conversion of existing facilities for any purpose as requested by the customer will be performed by the Company in compliance with the terms and conditions of "Permanent Discontinuance" for the facilities to be removed and "Authorization of Additional Facilities" for the new facilities installed.

5. Change of Existing Company Luminaires to LED Luminaire Facilities
The change or conversion of existing Facilities to LED luminaires requested by the customer will be performed by the Company in compliance with the provisions below, the terms and conditions of "Permanent Discontinuance" for the Facilities to be removed; and "Authorization of Additional Facilities" for the new LED Facilities to be installed.

5.1 Upon request, the Company will install/replace its in-service Roadway luminaires with LED Roadway luminaires, dependent upon the customer's compliance with the terms and conditions of this tariff, on a first come, first served basis as determined by the Company. The Company's obligation to install/replace in-service Roadway luminaires in any annual period shall be limited to no more than 20% of the Company's currently installed Roadway luminaires. The customer must commit to a conversion of no less than 15% of their currently installed Company Owned Roadway luminaires, or a minimum of 100 of their currently installed Company Owned Roadway luminaires, whichever is greater, per bill account in an annual period.

5.2 The customer must agree in writing to compensate the Company as defined in the Permanent Discontinuance provision. The customer shall have the option to:

(a) make a one-time payment, or
(b) make monthly levelized payments with the interest rate set at the Company's authorized pretax weighted average cost of capital in effect at the time of execution of the agreement over a term not to exceed ten (10) years.

Received: 10/30/2015
Status: EFFECTIVE
Effective Date: 06/01/2016

SERVICE CLASSIFICATION NO. 2 (Continued)

B. Special Provisions (Continued)

6. Customer Equipment Identification
Reference General Information, Section V.

7. Customer Ownership of Facilities
At the option of the Company, customer may elect to own, operate and maintain the poles/standards and associated foundations, and separately the conduits pursuant to Company's specifications. The Company will not service or maintain customer owned facilities under this service classification. However, conduit and all other related underground circuit infrastructure (excluding cable) that are installed by the customer at their cost for use by the Company at no cost, so as to provide specified service, will be considered property of the Company for the purpose of minor maintenance and repaired at Company expense. Customer installed facilities requiring relocation or replacement to continue reliable service in the opinion of the Company will be the responsibility of the customer.

8. Customer Responsibilities
Reference General Information, Section V.

9. Facility/Equipment Obsolescence
Reference General Information, Section V.

10. Facility Service Limitation
Reference General Information, Section V.

11. Schedule “SL2” Revision
Whenever during any month facilities are installed, removed or otherwise changed from the original, pursuant to select provisions, Company may complete, execute and supply to customer a revised Schedule “SL2.” The Company’s failure to provide such a revised Schedule “SL2” shall not relieve the customer of its obligation to pay for any lighting services furnished to the customer by the Company. The Company may require customer to submit all such work requests on appropriate customer letterhead along with an approved form resolution, if applicable. The Company may further require that the customer’s revised Schedule “SL2” be executed by a duly authorized representative of the customer and returned to Company. The monthly bill to customer shall reflect such installations, removals or replacements.

Effective date postponed to 06/01/2016. See Supplement No. 26.

Received: 01/31/2011
Status: EFFECTIVE
Effective Date: 02/01/2011

SERVICE CLASSIFICATION NO. 2 (Continued)

NIAGARA MOHAWK POWER CORPORATION d/b/a NATIONAL GRID
P.S.C. NO. 214 ELECTRICITY - S.C. NO. 2
FORM "SL2" - APPLICATION FOR SERVICE

BY AND BETWEEN NIAGARA MOHAWK POWER CORPORATION AND

_____ _____ (hereinafter called “Applicant”)
(Applicant Name) (Mailing Address)

_____ _____
(Lighting District Reference) (LD Reference No.)

Date: _____ , _____

The _____ of _____ County, New York, (hereinafter called "Applicant"), pursuant to the attached authorization dated _____, hereby applies to NIAGARA MOHAWK POWER CORPORATION (hereinafter called "Company"), to furnish, install, operate and maintain for Applicant an electric lighting system along the streets, roads, highways and/or other public places within the jurisdictional boundaries of such state, municipality or governmental authority that is a party to this agreement. Service to Applicant shall be through a single billing account.

Upon acceptance by Company, this application constitutes an agreement and contract for the furnishing of street lighting service in accordance with the terms and conditions set forth in Service Classification No. 2 of P.S.C. No. 214 Electricity as now on file with the Public Service Commission of the State of New York, or in accordance with the same as from time to time changed or amended and made effective in accordance with the rules of the Commission. This agreement and contract shall be effective for an initial period of _____ year(s) from _____ (Date) and hereafter until canceled by either party as provided for in Service Classification No. 2.

Applicant shall pay for the service as described in Schedule "SL2" dated _____, ____ appended hereto and made a part hereof for the facilities installed or to be installed at the effective date hereof, and, whenever the facilities installed to render the service are subsequently replaced, increased or decreased, as provided in Service Classification No. 2, Applicant shall pay for the service in accordance with the listing of the facilities set forth upon a revised Schedule "SL2", which shall at its effective date supersede Schedule "SL2" theretofore in effect. The rates and charges as set forth in the Tariff, as amended from time to time, shall apply to the facilities described and identified in Schedule “SL2”.

Company shall secure compensation and pay or provide the same in the manner and to the extent provided for by applicable provisions of the Workmen's Compensation Law for the benefit of its employees, having employments within the provisions of the law and engaged in the performance of the agreement, on account of injuries arising out of or in the course of their employments and Company shall not assign, transfer, convey, sublet or otherwise dispose of the agreement or its right, title or interest therein, or its power to execute the same to any person, company or corporation without previous consent of Applicant; provided that a consolidation or merger in which Company participates shall not be deemed to be within the provisions of this paragraph.

Received: 01/31/2011
Status: EFFECTIVE
Effective Date: 02/01/2011

SERVICE CLASSIFICATION NO. 2 (Continued)

The Company shall not, without the previous written consent of the officer, board or agency awarding this contract, assign, transfer, convey, sublet or otherwise dispose of its contract or its right, title or interest therein or its power to execute such contract to any other person or corporation except that consent is hereby given by the officer, board or agency awarding this contract to the Company to sublet from time to time the installation or maintenance of the facilities required, provided, however, that such consent shall in no way relieve the Company of any of its obligations to Applicant under the terms and provisions of this contract.

All previous agreements and contracts between the parties or their predecessors covering all or a portion of the services provided herein shall terminate on the effective date of this application, except that the obligation of Applicant to pay for services theretofore rendered under any such prior agreements and contracts shall survive. The effective date of this agreement shall be the date of party signing last in time.

ATTEST:

_____
(Signature)

_____
(Print Name)

APPLICANT'S DULY AUTHORIZED REPRESENTATIVE

By:_____
(Signature)

_____
(Print Name)

_____
(Title)

_____
(Date)

ACCEPTED:
NIAGARA MOHAWK POWER CORPORATION

By:_____
(Signature)

_____
(Title)

_____
(Print Name)

_____
(Date)

Received: 01/31/2011
Status: EFFECTIVE
Effective Date: 02/01/2011

SERVICE CLASSIFICATION NO. 2 (Continued)

NIAGARA MOHAWK POWER CORPORATION d/b/a NATIONAL GRID P.S.C. NO. 214 ELECTRICITY S.C. NO. 2 SCHEDULE SL2	CUSTOMER NAME	BILL ACCOUNT NUMBER
	LIGHTING DISTRICT REFERENCE	LD REFERENCE NO.
SERVICE AGREEMENT DATE	EFFECTIVE BILL PERIOD (mo/yr)	CSS ORDER NO.

SUPERSEDING PREVIOUS SCHEDULE SL OR SCHEDULE SL2 DATED: _____

Description	Qty Unit Chg (+/-)	Qty Bill Total	Description	Qty Unit Chg (+/-)	Qty Bill Total	Description	Qty Unit Chg (+/-)	Qty Bill Total
STANDARD CHARGES			**STANDARD CHARGES**			**STANDARD CHARGES**		
LAMPS			**LUMINAIRES CONTINUED**			**ARMS/BRACKETS**		
LP HS 70			LM Roadway 175			AR Alum>16' Roadway		
LP HS 100			LM Roadway 250			AR Niagara Ped Sgl		
LP HS 150			LM Roadway 400			AR Alum>16' Flood		
LP HS 250			LM Setback 250			AR Contemporary XArm		
LP HS 400			LM Setback 400			AR Ornamental XArm		
LP MH 175			LM Shoebox 70			BK Alum Roadway		
LP MH 250			LM Shoebox 100			BK Park Ave South		
LP MH 400			LM Shoebox 150			BK Alum Flood		
			LM Shoebox 250					
LUMINAIRES			LM Shoebox 400			**BASES**		
LM Aspen Grove 70			LM Traditional 70			BS Frangible		
LM Aspen Grove 100			LM Traditional 100			BS Non-Frangible		
LM Aspen Grove 150			LM Traditional 150			BS Niagara		
LM Central Park 100			LM Traditional 175					
LM Central Park 175			LM Underpass 70			**FOUNDATIONS**		
LM Coach 70			LM Underpass 100			FD Concrete >16'		
LM Coach 100			LM Underpass 150			FD Concrete >16' HD		
LM Coach 150			LM Underpass 175			FD Concrete =<16'		
LM Coach 175			LM Williamsville 70			FD Concrete>16' PC		
LM Delaware Park 150			LM Williamsville 100			FD Concrete=<16' PC		

Received: 10/30/2015
Status: EFFECTIVE
Effective Date: 06/01/2016

SERVICE CLASSIFICATION NO. 2 (Continued)

LM Delaware Park 175			LL Roadway LED A			**CIRCUITS**		
LM Delaware Park 250			LL Roadway LED B			CR UG Cable & Cndt		
LM Delaware Park 400			LL Roadway LED C			CR UG Cable Only		
LM Del Park Ped 70			LL Roadway LED D			CR UG DB Cable		
LM Del Park Ped 100			**POLES/STANDARDS**			CR UG Res DB Cable		
LM Del Park Ped 175			SD Alum >16' AB			CR EF Cbl & Cndt /ft		
LM Edgewater 100			SD Alum >16' AB HD			CR EF Cable Only /ft		
LM Edgewater 150			SD Alum >16' AB SQ			CR EF DB Cable /ft		
LM Edgewater 175			SD Conc Metropol DE					
LM Edison 70			SD Fbgl >16' AB			**CONVENIENCE OUTLETS**		
LM Edison 100			SD Alum Villager AB			FO New Standard		
LM Edison 150			SD Fbgl =<16' AB PT			FO Existing Standard		
LM Flood 250			SD Fbgl =<16' DE PT			FO Wood Pole		
LM Flood 400			SD Alum Niagara AB					
LM Roadway 70			SD Alum Armory Sq AB			**OTHER CHARGES / CREDITS**		
LM Roadway 100			SD Fbgl President AB			Lighting Svc Charge		
LM Roadway 150			SD Fbgl President DE					
LM Williamsville 150			SD Mounting Adaptor					
LM Williamsville 175								
CLOSED CHARGES			**CLOSED CHARGES**			**CLOSED CHARGES**		
LAMPS/LUMINAIRES			**LUMINAIRES CONTINUED**			**ARMS/BRACKETS**		
LL H-Mast HS 1KW 6LP			LM Underpass 250			AR Steel>16' Roadway		
			LM Washington 100			AR Little Falls Cane		
LAMPS						BK Steel Roadway		
LP HS 1000								
LP MH 1000						**FOUNDATIONS**		
						FD Concrete >16' Dbl		
LUMINAIRES			**POLES/STANDARDS**			FD Concrete >16' XHD		
LM Franklin Sq 100			SD Alum =<16' AB SQ			FD Concrete Traff PL		
LM Franklin Sq 150			SD Alum Lil Falls AB					
LM Franklin Sq 175			SD Alum Winter Pk AB					
LM Globe 150								
LM Globe 175								
LM Little Fall PT 70								
LM Little Fall TD 70								
LM Roadway 1000								
LM Shoebox 1000								

Effective date postponed to 06/01/2016. See Supplement No. 26.

Received: 02/24/2012
Status: EFFECTIVE
Effective Date: 05/21/2012

SERVICE CLASSIFICATION NO. 2 (Continued)

OBSOLETE CHARGES			OBSOLETE CHARGES			OBSOLETE CHARGES		
LAMPS/LUMINAIRES			**LUMINAIRES**			SD Steel 50' AB RND		
LL Open IN <2500			LM Contemporary 70			SD Steel 35' AB SQ		
LL Enclosed IN <2500			LM Contemporary 100			SD Steel >16' AB		
LL Open IN 4000			LM Contemporary 150			SD Steel >16' AB HD		
LL Enclosed IN 4000			LM Contemporary 175			SD Steel>16 AB TS AR		
LL Enclosed IN 6000			LM Contemporary 250			SD Steel >16' TS SQ		
LL Enclosed IN 10K			LM Contemporary 400			SD Steel =<16' AB PT		
LL Open MV 100			LM Globe 250 Buff-5			SD Steel =<16' DE PT		
			LM Mariner 100			SD Iron Armory Sq AB		
LAMPS			LM Mariner 150					
LP MV 100						**FOUNDATIONS**		
LP MV 175						FD Mech - Screw Type		
LP MV 400			**POLES/STANDARDS**					
LP MV 1000			SD Steel OH =< 1SP			**CONVENIENCE OUTLETS**		
LP MV 250 5-LP			SD Alum OH =< 1SP			FO Old		
MISC BILL COMPONENTS NOT LISTED								

SIGNED: _____ APPROVED: _____
(Customer Representative) (Designation of Authority)

PRINT NAME: _____ PRINT NAME: _____

DATE: _____ DATE: _____

The parties agree that if this is a superseding Schedule SL2 then it shall supersede any previous Schedule SL or Schedule SL2 in effect and shall be made a part of the Service Agreement between the customer and the Company.

Received: 02/24/2012
Status: EFFECTIVE
Effective Date: 05/21/2012

SERVICE CLASSIFICATION NO. 3
STREET LIGHTING - UNMETERED
CUSTOMER OWNED, CUSTOMER MAINTAINED

APPLICABLE TO USE OF SERVICE FOR:

Unmetered electric service to customer owned or leased outdoor lighting luminaires located along streets, highways, roadways and ways open to public use where Company has facilities appropriate for service for the State of New York, for municipal corporations for duly constituted street lighting districts, and for duly constituted public agencies, public authorities and public corporations.

CHARACTER OF SERVICE:

Electric service is provided to customer owned, operated and maintained facilities at a designated service type, as defined below, by the customer. Reference General Information, Section IV.

A. Overhead Service (OH)

Reference General Information, Section IV.

B. Underground Service (UG)

Reference General Information, Section IV.

APPLICATION FOR SERVICE:

The Company may require written application on the Company's Form "SL3", however, failure to execute a Form "SL3" shall not exempt the customer from paying all rates and charges provided herein. When required by the Company, the customer's completed Form "SL3" - Application for Service shall be signed by a duly authorized representative, to which a designated Schedule "SL3" shall be attached. The Schedule "SL3" will list the lamp types, sizes and quantities initially supplied. Such application and attached schedule, when accepted by Company, shall constitute an agreement between customer and Company, subject to the terms and conditions set forth in this service classification. Attachment of customer equipment to Company distribution poles requires an additional customer agreement for pole attachments, provided however that failure to include any facilities in any Schedule "SL3" shall not exempt the customer from paying all rates and charges applicable hereunder to such facilities.

RATE:

This service classification is limited to the specified services as set forth below which have been installed or authorized to be installed on or after the effective date of this service classification. The charge for service during each billing cycle shall be for service as of the first day of that billing cycle.

A. Volumetric Charge

1. Volumetric Energy Consumption
The cumulative energy consumed by the individual luminaires is determined by the aggregation of each luminaires' corresponding type and size of lamp as identified below in Table 1, Lamp Billable Wattages, multiplied by the prorated portion of the appropriate monthly hours of operation during the billing period as identified in Table 2, Hours of Operation, divided by 1,000 to yield kWh. Reference General Information, Section IV.

Received: 03/29/2013
Status: EFFECTIVE
Effective Date: 04/01/2013

SERVICE CLASSIFICATION NO. 3 (Continued)

2. Billable Wattage

The billable wattages are presented in Table 1, below. Reference General Information, Section V.

Table 1 - Lamp Billable Wattages

Lamp Billable Wattages

High Intensity Discharge (HID)

Lamp Type	Lamp Size (Watts)									
	50	70	100	150	175	200	250	400	700	1000
Mercury Vapor (MV)	-----	-----	130	-----	211	-----	307	477	784	1095
High Pressure Sodium (HPS)	61	86	118	173	-----	-----	304	470	-----	1106
Metal Halide (MH)	-----	-----	-----	-----	207	-----	295	451	-----	1078

Lamp Type	Lamp Size (Watts)				
	35	55	90	135	180
Low Pressure Sodium (LPS)	63	84	131	182	229

Fluorescent

Lamp Type	Lamp Size (Watts)									
	50	70	100	150	175	200	250	400	700	1000
Fluorescent (FR)	-----	-----	130	-----	-----	246	-----	493	-----	-----

Incandescent

Lamp Type	Lamp Size (Watts)						
	600	1,000	2,500	4,000	6,000	10,000	15,000
Incandescent (INC)	58	103	202	327	448	690	860

Induction

Lamp Type	Lamp Size (Watts)														
	23	40	55	65	70	80	85	100	120	150	165	200	250	300	400
Induction (IND)	26	44	59	69	75	85	90	105	125	155	170	210	265	320	440

Solid State Light Source (SSL)

	Total Wattage Range									
Start:	0.1	50.1	100.1	150.1	200.1	250.1	300.1	350.1	400.1	450.1
End:	50.0	100.0	150.0	200.0	250.0	300.0	350.0	400.0	450.0	500.0

Light Source Type	Light Source Billable Wattage (Watts)									
Light Emitting Diode (LED)	25	75	125	175	225	275	---	---	---	---

3. Hours of Operation

Reference General Information, Section V.

Normal Hours of Operation

Received: 02/27/2015
Status: EFFECTIVE
Effective Date: 04/01/2015

SERVICE CLASSIFICATION NO. 3 (Continued)

The monthly assignment of normal hours of operation is presented in Table 2, below. Reference General Information, Section V.

Continuous Hours of Operation
The monthly assignment of continuous hours of operation is presented in Table 2, below. Reference General Information, Section V.

Non-Standard Hours of Operation
Reference General Information, Section V.

Table 2 - Hours of Operation

Monthly Hours of Operation (Hours)

Months	Normal Operation	Continuous Operation
January	444	744
February*	368	672
March	362	744
April	305	720
May	275	744
June	246	720
July	264	744
August	301	744
September	334	720
October	393	744
November	421	720
December	457	744
Total	4170	8760
*Leap Year Adjustment		
February	381	696
Adjusted Leap Year Total	4183	8784

4. Distribution Delivery Charge for all Load Zones, per kWh $0.05906

5. Company Supplied Electricity Supply Service Charges, per kWh
Reference General Information, Section IV.

B. Adjustment to Volumetric Charges

Reference General Information, Section IV.

C. Pole Attachment Charge

The monthly pole attachment charge for wood poles is $0.60 per pole. This charge will be subject to adjustments made from time to time by Company. Attachments to Company distribution poles will be subject to an attachment agreement as stated in APPLICATION FOR SERVICE.

Received: 03/29/2013
Status: EFFECTIVE
Effective Date: 04/01/2013

SERVICE CLASSIFICATION NO. 3 (Continued)

D. Other Charges and Credits

Reference General Information, Section V.

1. Outage Credit Allowance
An outage credit allowance of twenty two cents ($0.22) per lamp per night will be provided following the customer's proper notice to the Company of the luminaire malfunction (outage). The outage credit allowance will be provided for the period following the date of proper Company notice until the date the facility is operating. Reference General Information, Section V.

2. Lighting Service Charge
Reference General Information, Section V.

Lighting Service Charge, per occurrence	$129.15

3. Convenience Outlet Charge - CLOSED OFFERING
Service to convenience (festoon) receptacle outlets under this Service Classification is closed to new applications. The company will honor existing convenience (festoon) receptacle outlet service, located on existing lighting facilities or wood poles, per the written request of the customer for the purpose of providing auxiliary, unmetered, 120VAC electric service. The customer of record for this service classification is the responsible party for energy (kWh) used through the convenience outlet(s) and is billed separately under an appropriate service classification as provided within the Company's Electric Tariff.

4. Relocation of Existing Facilities
Pole replacements necessitated by the attachment of customer's street lighting equipment (make ready work) shall be performed by Company or joint owner at customer's expense. Reference General Information, Section V.

E. Increase in Rates and Charges

Reference General Information, Section IV.

DETERMINATION OF BILLING:

Reference General Information, Section IV.

A. MINIMUM CHARGE:

The application of charges as defined under RATE for the duration of the unexpired term, utilizing the billing quantities effective at the time of termination notice, plus any balance due for service rendered. Reference General Information, Section IV.

Received: 02/24/2012
Status: EFFECTIVE
Effective Date: 05/21/2012

SERVICE CLASSIFICATION NO. 3 (Continued)

B. Determination of Billing Quantities

Reference General Information, Section IV.

C. Terms of Payment

Reference General Information, Section IV.

D. Billing Discrepancies

1. Billing Discrepancy Notification
Reference General Information, Section IV.

2. Customer Records
Reference General Information, Section IV.

3. Adjustment of Previous Bills
Reference General Information, Section IV.

4. Backbilling
Reference General Information, Section IV.

Received: 01/31/2011
Status: EFFECTIVE
Effective Date: 02/01/2011

SERVICE CLASSIFICATION NO. 3 (Continued)

TERM:

Term of service shall be a minimum of one (1) year. Reference General Information, Section IV.

PROVISIONS:

A. General Provisions

The provisions designated in this section apply to all services of this tariff. The full definitions of the terms and conditions identified below are provided for in General Information, Section IV.

1. Company Service Liability Disclaimer
   Reference General Information, Section IV.

2. Customer Equipment Liability Disclaimer
   Reference General Information, Section IV.

3. Electrical Supply Connections
   Reference General Information, Section IV.

4. Excessive Damage to Company Facilities
   Reference General Information, Section IV.

5. Extension of Company Distribution Facilities
   Reference General Information, Section IV.

6. Legislative Hierarchy
   Reference General Information, Section IV.

7. Lighting Design Liability Disclaimer
   Reference General Information, Section IV.

8. Maintenance of Customer Owned Equipment
   Reference General Information, Section IV.

9. Property Rights
   Reference General Information, Section IV.

10. Service Classification Revision
    Reference General Information, Section IV.

11. Service Jurisdiction
    Reference General Information, Section IV.

12. Service Limitations
    Reference General Information, Section IV.

Received: 02/24/2012
Status: EFFECTIVE
Effective Date: 05/21/2012

SERVICE CLASSIFICATION NO. 3 (Continued)

A. General Provisions (Continued)

1. Site Restoration
Reference General Information, Section IV.

2. Termination of Service
Reference General Information, Section IV.

15. Undergrounding of Electric Distribution System Infrastructure
Reference General Information, Section IV.

16. Vegetation Management
Reference General Information, Section IV.

B. Special Provisions

The provisions designated in this section are applicable to this service classification. The full definitions of the terms and conditions identified below are provided for in General Information, Section V.

1. Additional Equipment
Energy for additional lamps will be supplied at customer's request. The Company may require that such request be made in writing. Such written requests may be appended to customer's Form "SL3" - Application for Service. Written notification may also be required when lamps are to be removed. A revised Schedule "SL3" may also be required. If attachment to distribution poles is desired, customer may also be required to enter into, or modify, an attachment agreement which states the terms and conditions under which attachments may be made. When additional Company facilities are required for lighting service, Company will install such facilities at customer's expense.

2. Customer Equipment Audit
An audit of the customer's street lighting system may be conducted by Company, or its designee, and customer's representatives. If additional lamps have been installed without notification to Company, the Company will bill the customer for electrical service connection, monthly pole attachment charges and energy as though the lamps were installed at the time of the last audit.

3. Customer Equipment Identification
Reference General Information, Section V.

4. Customer Responsibilities
Reference General Information, Section V.

5. Daylight Illumination
Lamps found illuminated during daylight hours, will initiate a 24-hour notice to the customer. If the lamp remains illuminated after this time period, the customer will be charged on the basis of continuous illumination until the Company is notified the lamp has been repaired.

Received: 01/31/2011
Status: EFFECTIVE
Effective Date: 02/01/2011

SERVICE CLASSIFICATION NO. 3 (Continued)

NIAGARA MOHAWK POWER CORPORATION d/b/a NATIONAL GRID
P.S.C. NO. 214 ELECTRICITY - S.C. NO. 3
FORM "SL3" - APPLICATION FOR SERVICE

BY AND BETWEEN NIAGARA MOHAWK POWER CORPORATION AND

_____ _____ (hereinafter called “Applicant”)
(Applicant Name) (Mailing Address)

_____ _____
(Lighting District Reference) (LD Reference No.)

Date: _____ , _____

The _____ of _____ County, New York, (hereinafter called "Applicant"), pursuant to the attached authorization dated _____, hereby applies to NIAGARA MOHAWK POWER CORPORATION (hereinafter called "Company"), to supply electrical energy to Applicant's electric lighting system along the streets, roads, highways and/or other public places in _____.

Upon acceptance by Company, this application shall constitute an agreement and contract for supplying electrical energy service in accordance with the terms and conditions set forth in Service Classification No. 3 of the Company's Schedule of P.S.C. No. 214 Electricity as now on file with the Public Service Commission of the State of New York, or in accordance with the same as from time to time changed or amended and made effective in accordance with the rules of the Commission. This agreement and contract shall be effective for an initial period of one year and from year to year thereafter until canceled by either party as provided for in the Service Classification.

Applicant shall pay for the energy, based on the total wattage, and other charges as set forth in Schedule "SL3" dated _____ , _____ attached hereto and made a part hereof for the lamps to be installed at the effective date hereof, and, whenever the lamps installed are subsequently increased in size, increased in number or decreased in number, Applicant shall pay for the total energy and other charges in accordance with the listing of lamp and other charges set forth upon a revised Schedule “SL3”, which shall at its effective date supersede Schedule “SL3” theretofore in effect.

Applicant and its contractors shall secure compensation insurance and pay or provide the same in the manner and to the extent provided for by applicable provisions of the Workmen's Compensation Law for the benefit of its employees, having employments within the provisions of the law and engaged in the performance of the agreement, on account of injuries arising out of or in the course of their employments.

Received: 01/31/2011
Status: EFFECTIVE
Effective Date: 02/01/2011

SERVICE CLASSIFICATION NO. 3 (Continued)

The Company shall not assign, transfer, convey, sublet or otherwise dispose of its agreement or its right, title or interest therein or its power to execute the same to any person or corporation without previous consent of Applicant, provided that a consolidation or merger in which Company participates shall not be deemed to be within the provisions of this paragraph.

ATTEST:

_____
(Signature)

_____
(Print Name)

APPLICANT'S DULY AUTHORIZED REPRESENTATIVE

By:_____
(Signature)

_____
(Print Name)

_____
(Title)

_____
(Date)

ACCEPTED:
NIAGARA MOHAWK POWER CORPORATION

By:_____
(Signature)

_____
(Title)

_____
(Print Name)

_____
(Date)

Received: 02/24/2012
Status: EFFECTIVE
Effective Date: 05/21/2012

SERVICE CLASSIFICATION NO. 3 (Continued)

NIAGARA MOHAWK POWER CORPORATION d/b/a NATIONAL GRID P.S.C. NO. 214 ELECTRICITY S.C. NO. 3 SCHEDULE SL3	CUSTOMER NAME	BILL ACCOUNT NUMBER
	LIGHTING DISTRICT REFERENCE	LD REFERENCE NO.
SERVICE AGREEMENT DATE	EFFECTIVE BILL PERIOD (mo/yr)	CSS ORDER NO.
SUPERSEDING PREVIOUS SCHEDULE W OR SCHEDULE SL3 DATED: _____		

This Schedule "SL3" lists the number of various size lamps installed by the customer for that the total energy will be billed monthly in accordance with P.S.C. No. 214, S.C. No. 3 and the monthly pole attachment charge for existing distribution poles. Connection, reconnection and disconnection lighting service charges will be added to the customer's billing as they occur.

Energy for Lamps will be based on normal hours of operation and billable wattage.

Type of Lamp	Lamp Size		Billable Wattage	Number Installed	Total Wattage
MERCURY VAPOR	100	Watt	130	_____	_____
	175		211	_____	_____
	250		307	_____	_____
	400		477	_____	_____
	700		784	_____	_____
	1,000		1,095	_____	_____
HIGH PRESSURE SODIUM	50	Watt	61	_____	_____
	70		86	_____	_____
	100		118	_____	_____
	150		173	_____	_____
	250		304	_____	_____
	400		470	_____	_____
	1,000		1,106	_____	_____

Received: 03/29/2013
Status: EFFECTIVE
Effective Date: 04/01/2013

SERVICE CLASSIFICATION NO. 3 (Continued)

Type of Lamp	Lamp Size		Billable Wattage	Number Installed	Total Wattage
LOW PRESSURE SODIUM	35	Watt	63	_____	_____
	55		84	_____	_____
	90		131	_____	_____
	135		182	_____	_____
	180		229	_____	_____
METAL HALIDE	175	Watt	207	_____	_____
	250		295	_____	_____
	400		451	_____	_____
	1,000		1,078	_____	_____
FLUORESCENT	100	Watt	130	_____	_____
	200		246	_____	_____
	400		493	_____	_____
INDUCTION	23	Watt	26	_____	_____
	40		44	_____	_____
	55		59	_____	_____
	65		69	_____	_____
	70		75	_____	_____
	80		85	_____	_____
	85		90	_____	_____
	100		105	_____	_____
INCANDESCENT	600	Lumen	58	_____	_____
	1,000		103	_____	_____
	2,500		202	_____	_____
	4,000		327	_____	_____
	6,000		448	_____	_____
	10,000		690	_____	_____
	15,000		860	_____	_____
LIGHT EMITTING DIODE	0.1 -	50.0 Watts	25	_____	_____
	50.1 -	100.0	75	_____	_____
	100.1 -	150.0	125	_____	_____
	150.1 -	200.0	175	_____	_____
	200.1 -	250.0	225	_____	_____
	250.1 -	300.0	275	_____	_____

TOTAL _____

Received: 02/24/2012
Status: EFFECTIVE
Effective Date: 05/21/2012

SERVICE CLASSIFICATION NO. 3 (Continued)

Energy for Lamps based on continuous hours of operation and billable wattage.

Type of Lamp	**Lamp Size**	**Billable Wattage**	**Number Installed**	**Total Wattage**
_____	_____	_____	_____	_____
_____	_____	_____	_____	_____
_____	_____	_____	_____	_____
_____	_____	_____	_____	_____
_____	_____	_____	_____	_____
_____	_____	_____	_____	_____
			TOTAL	_____

Number of Pole Attachments: _____ **TOTAL WATTAGE** _____

SIGNED: _____
(Customer Representative)

APPROVED: _____
(Designation of Authority)

PRINT NAME: _____

PRINT NAME: _____

DATE: _____

DATE: _____

The parties agree that if this is a superseding Schedule SL3 then it shall supersede any previous Schedule W or Schedule SL3 in effect and shall be made a part of the Service Agreement between the customer and the Company.

Received: 01/31/2011
Status: EFFECTIVE
Effective Date: 02/01/2011

SERVICE CLASSIFICATION NO. 3 (Continued)

RESERVED FOR FUTURE USE

Received: 01/31/2011
Status: EFFECTIVE
Effective Date: 02/01/2011

SERVICE CLASSIFICATION NO. 3 (Continued)

RESERVED FOR FUTURE USE

Received: 01/31/2011
Status: EFFECTIVE
Effective Date: 02/01/2011

SERVICE CLASSIFICATION NO. 3 (Continued)

RESERVED FOR FUTURE USE

Received: 01/31/2011
Status: EFFECTIVE
Effective Date: 02/01/2011

SERVICE CLASSIFICATION NO. 3 (Continued)

RESERVED FOR FUTURE USE

Received: 01/31/2011
Status: EFFECTIVE
Effective Date: 02/01/2011

SERVICE CLASSIFICATION NO. 3 (Continued)

RESERVED FOR FUTURE USE

Received: 01/31/2011
Status: EFFECTIVE
Effective Date: 02/01/2011

SERVICE CLASSIFICATION NO. 3 (Continued)

RESERVED FOR FUTURE USE

Received: 01/31/2011
Status: EFFECTIVE
Effective Date: 02/01/2011

SERVICE CLASSIFICATION NO. 3 (Continued)

RESERVED FOR FUTURE USE

Received: 01/31/2011
Status: EFFECTIVE
Effective Date: 02/01/2011

SERVICE CLASSIFICATION NO. 3 (Continued)

RESERVED FOR FUTURE USE

Received: 01/31/2011
Status: EFFECTIVE
Effective Date: 02/01/2011

SERVICE CLASSIFICATION NO. 3 (Continued)

RESERVED FOR FUTURE USE

Received: 01/31/2011
Status: EFFECTIVE
Effective Date: 02/01/2011

SERVICE CLASSIFICATION NO. 3 (Continued)

RESERVED FOR FUTURE USE

Received: 02/24/2012
Status: EFFECTIVE
Effective Date: 05/21/2012

SERVICE CLASSIFICATION NO. 4
TRAFFIC CONTROL – UNMETERED
CUSTOMER OWNED, CUSTOMER MAINTAINED

CLOSED OFFERING

APPLICABLE TO USE OF SERVICE FOR:

Traffic control, ancillary enforcement devices and operating control equipment owned, installed and maintained for the State of New York, for counties, townships, cities and incorporated villages, municipal corporations for duly constituted public agencies, public authorities, and public corporations, and for individual customers for which the appropriate governmental body has issued applicable permits and where the Company has facilities to provide the unmetered service.

CHARACTER OF SERVICE: CLOSED OFFERING

This unmetered electric service is closed to new applicants, new installations or installations experiencing significant material change for existing customers as of MAY 21, 2012. The Company will maintain service of existing installations to customers presently under this service classification.

New applicants, new installations, installations experiencing significant material change for existing customers or for service other than continuous operation will be served under an appropriate metered service classification under the Company's Electric Tariff. Reference General Information, Section IV.

Electric service is provided to customer owned, operated and maintained facilities at a designated service type, as defined below, by the customer.

A. Overhead Service (OH)

Reference General Information, Section IV.

B. Underground Service (UG)

Reference General Information, Section IV.

APPLICATION FOR SERVICE:

This offering is closed to new applicants; therefore, application for new service is not applicable.

In no event shall a customer's failure to execute Form "TC" or the failure to include any traffic control and ancillary enforcement devices in Form "TC" exempt the customer from paying all rates and charges applicable hereunder.

RATE:

The charges under this service classification are based on a location. A location is defined as a distinct geographic area of managed traffic within approximately 500 feet in any direction from the customer's controller equipment, whereas traffic will consist of any powered/unpowered vehicular or pedestrian transport and whereas managed refers to any equipment or device, operating from a single electrical source point directly or indirectly utilized for the purpose of controlling traffic flow, maintaining safety, supporting regulatory enforcement and/or providing pertinent information. A location may consist of multiple intersections inclusive of their associated traffic control equipment provided compliance with all other characteristics of a location as stated above.

Received: 02/27/2015
Status: EFFECTIVE
Effective Date: 04/01/2015

SERVICE CLASSIFICATION NO. 4 (Continued)

A. Volumetric Charges

1. Volumetric Energy Consumption
The cumulative energy consumed by the individual devices is determined by aggregating the adjusted billable wattage of each device, utilizing either the customer provided manufacturer's specified total operating wattage value or the Company assignment of a predetermined billable wattage default value for similar, like-kind equipment, adjusted by the applicable operating-use factor, multiplied by the total hour equivalent of the number of days in the billing period, divided by 1,000 to yield kWh.

The customer is responsible for the accuracy of the data required to determine the total wattage at each location. The equipment default wattage rating values shall be shown on a statement, designated "Statement of Traffic Control Lens Wattage Values," filed with the Public Service Commission apart from this schedule not less than three (3) days before the effective date and may be revised from time to time. The default wattage rating values shall remain in effect from the date of original application until such time as the customer informs the Company of the equipment-specific wattage rating value(s). Reference General Information, Section IV.

2. Distribution Delivery Charge for all Load Zones
Basic Service Charge, per location: $24.96

3. Company Supplied Electricity Supply Service Charges, per kWh
Reference General Information, Section IV.

4. Transmission Charge for all Load Zones, per kWh $0.01075

B. Adjustments to Volumetric Charges

Reference General Information, Section IV.

C. Increase in Rates and Charges

Reference General Information, Section IV.

DETERMINATION OF BILLING:

Reference General Information, Section IV.

A. Minimum Charge

The applicable monthly Basic Service Charge per location is $24.96for the duration of the unexpired term, plus any balance due for service rendered. Reference General Information, Section IV.

B. Determination of Billing Quantities

Reference General Information, Section IV.

C. Terms of Payment

Received: 02/24/2012
Status: EFFECTIVE
Effective Date: 05/21/2012

SERVICE CLASSIFICATION NO. 4 (Continued)

D. Billing Discrepancies

1. Billing Discrepancy Notification
   Reference General Information, Section IV.

2. Customer Records
   Reference General Information, Section IV.

3. Adjustment of Previous Bills
   Reference General Information, Section IV.

4. Backbilling
   Reference General Information, Section IV.

TERM:

Term of service per location shall be a minimum of one (1) year. Reference General Information, Section IV.

PROVISIONS:

A. General Provisions

The provisions designated in this section apply to all services of this tariff. The full definitions of the terms and conditions identified below are provided for in General Information, Section IV.

1. Company Service Liability Disclaimer
   Reference General Information, Section IV.

2. Customer Equipment Liability Disclaimer
   Reference General Information, Section IV.

3. Electrical Supply Connections
   Reference General Information, Section IV.

4. Excessive Damage to Company Facilities
   Reference General Information, Section IV.

5. Extension of Company Distribution Facilities
   Reference General Information, Section IV.

6. Legislative Hierarchy
   Reference General Information, Section IV.

7. Lighting Design Liability Disclaimer
   Reference General Information, Section IV.

8. Maintenance of Customer Owned Equipment
   Reference General Information, Section IV.

9. Property Rights
   Reference General Information, Section IV.

Received: 02/24/2012
Status: EFFECTIVE
Effective Date: 05/21/2012

SERVICE CLASSIFICATION NO. 4 (Continued)

A. General Provisions (Continued)

10. Service Classification Revision
Reference General Information, Section IV.

11. Service Jurisdiction
Reference General Information, Section IV.

12. Service Limitations
Reference General Information, Section IV.

13. Site Restoration
Reference General Information, Section IV.

14. Termination of Service
Reference General Information, Section IV.

15. Undergrounding of Electric Distribution System Infrastructure
Reference General Information, Section IV.

16. Vegetation Management
Reference General Information, Section IV.

B. Special Provisions

The provisions designated in this section are applicable to this service classification. The full definitions of the terms and conditions identified below are provided for in General Information, Section V.

1. Additional Equipment
Energy for additional traffic control devices will be supplied at customer's request. The Company may require that such request be made in writing. Such written requests may be appended to customer's Form "TC" - Application for Service. Written notification may also be required when traffic control devices are to be removed. A revised Change Request Authorization Form (CRAF) may also be required. If attachment to distribution poles is desired, customer may also be required to enter into, or modify, an attachment agreement which states the terms and conditions under which attachments may be made. When additional Company facilities are required for lighting service, Company will install such facilities at customer's expense.

2. Customer Equipment Identification
Reference General Information, Section V.

3. Customer Responsibilities
Reference General Information, Section V.

Received: 01/31/2011
Status: EFFECTIVE
Effective Date: 02/01/2011

SERVICE CLASSIFICATION NO. 4 (Continued)

B. Special Provisions (Continued)

4. Location Audit
Audits of customer equipment, partial or complete, may be conducted by the Company. If audit results determine that a change in equipment has occurred without notification to the Company, the Company shall notify the customer of the audit results, adjust the customer's inventory records, and apply the adjustments to correct future billings. If audit reveals inaccurate reporting of customer's equipment, the Company shall have the right to meter the location(s) and the meter and installation costs are the responsibility of the customer. Customer is responsible for providing to the Company an equipment inventory for specific locations, as identified by the Company, representing a partial apportionment of their total locations. Such inventories shall be conducted on an annual basis whereby all locations shall be inventoried on a three year cycle.

The customer may request meter service. Meter service, initiated either by the Company or customer, will be served under Service Classification No. 2 of the Electric Tariff.

Received: 01/31/2011
Status: EFFECTIVE
Effective Date: 02/01/2011

SERVICE CLASSIFICATION NO. 4 (Continued)

NIAGARA MOHAWK POWER CORPORATION d/b/a NATIONAL GRID
P.S.C. NO. 214 ELECTRICITY - S.C. NO.4
TRAFFIC CONTROL - UNMETERED SERVICE
FORM "TC" - APPLICATION FOR SERVICE

APPLICATION FOR SERVICE IS SUSPENDED AS OF FEBRUARY 1, 2011

BY AND BETWEEN NIAGARA MOHAWK POWER CORPORATION AND

_____ _____ (hereinafter called “Applicant”)
(Applicant Name) (Mailing Address)

Date: _____ , _____

The _____ of _____ County, New York, (hereinafter called "Applicant"), pursuant to the attached authorization dated _____, hereby applies to NIAGARA MOHAWK POWER CORPORATION (hereinafter called "Company"), to supply electrical energy to applicant’s electric traffic control system along the streets, roads, highways and/or other public places in _____.

Upon acceptance by Company, this application shall constitute an agreement and contract for supplying electrical energy service in accordance with the terms and conditions set forth in Service Classification No. 4 of the Company's Schedule of P.S.C. No. 214 Electricity as now on file with the Public Service Commission of the State of New York, or in accordance with the same as from time to time changed or amended and made effective in accordance with the rules of the Commission. This agreement and contract shall be effective for an initial period of one year and from year to year thereafter until canceled by either party as provided for in the Service Classification.

Applicant shall pay for service based upon the rates and charges in effect for Service Classification No. 4 of P.S.C. No. 214 Electricity. Billing kilowatt-hours utilized prior to customer obtaining service under this service classification will be used for the initial term of service under this service classification, except that customer shall provide Company with thirty (30) days written notice prior to the customer increasing or decreasing the size or number of traffic control equipment. Applicant shall then pay for service during the initial term of service in accordance with revised billing kilowatt-hours computed by Company. After the initial term of service, billing kilowatt-hours shall be determined as set forth in the “Volumetric Energy Consumption” section of Service Classification No. 4 of P.S.C. No. 214 Electricity.

Applicant and its contractors shall secure compensation insurance and pay or provide the same in the manner and to the extent provided for by applicable provisions of the Workmen's Compensation Law for the benefit of its employees, having employments within the provisions of the law and engaged in the performance of the agreement, on account of injuries arising out of or in the course of their employments.

The Company shall not assign, transfer, convey, sublet or otherwise dispose of its agreement or its right, title or interest therein or its power to execute the same to any person or corporation without previous consent of customer, provided that a consolidation or merger in which Company participates shall not be deemed to be within the provisions of this paragraph.

Received: 01/31/2011
Status: EFFECTIVE
Effective Date: 02/01/2011

SERVICE CLASSIFICATION NO. 4 (Continued)

All previous agreements and contracts between the parties or their predecessors covering all or a portion of the services provided herein shall terminate on the effective date of this application, except that the obligation of Applicant to pay for service rendered under any such prior agreements and contracts shall survive.

____ By the customer checking this box, the customer acknowledges the availability of metered service for traffic control application under PSC No. 220 Electricity.

ATTEST:

_____
(Signature)

_____
(Print Name)

APPLICANT'S DULY AUTHORIZED REPRESENTATIVE

By:_____
(Signature)

_____
(Print Name)

_____
(Title)

_____
(Date)

ACCEPTED:
NIAGARA MOHAWK POWER CORPORATION

By:_____
(Signature)

_____
(Title)

_____
(Print Name)

_____
(Date)

Received: 01/31/2011
Status: EFFECTIVE
Effective Date: 02/01/2011

SERVICE CLASSIFICATION NO. 4 (Continued)

RESERVED FOR FUTURE USE

Received: 01/31/2011
Status: EFFECTIVE
Effective Date: 02/01/2011

SERVICE CLASSIFICATION NO. 5

STREET LIGHTING - UNMETERED
CONTRIBUTORY PROVISIONS
(RESERVED FOR FUTURE USE)

Received: 02/24/2012
Status: EFFECTIVE
Effective Date: 05/21/2012

SERVICE CLASSIFICATION NO. 6
STREET LIGHTING - UNMETERED
CUSTOMER OWNED-COMPANY MAINTAINED

CLOSED OFFERING

APPLICABLE TO USE OF SERVICE FOR:

Customer owned-Company maintained service for the lighting of streets, highways, roadways, and ways open to public use by vehicles or pedestrians in parks or other public places, for the State of New York, for municipal corporations, for duly constituted street lighting districts, for public agencies, for public authorities and for public corporations.

CHARACTER OF SERVICE: CLOSED OFFERING

This unmetered electric lighting service is closed to new applicants, new installations or installations experiencing significant material change for existing customers as of MAY 21, 2012. The Company will continue to provide service under this service classification to existing customers having established lighting installations under this service classification. Reference General Information, Section IV.

Electric service is provided to customer owned and operated equipment and Company maintained lamp equipment at a designated service type, as defined below, by the customer.

A. Overhead Service (OH)

Reference General Information, Section IV.

B. Underground Service (UG)

Reference General Information, Section IV.

APPLICATION FOR SERVICE:

This offering is closed to new applicants; therefore, application for new service is not applicable.

In no event shall a customer's failure to execute Form "SL6" or "M6" or the failure to include any lighting facilities in Schedule "SL6" exempt the customer from paying all rates and charges applicable herein.

Received: 01/31/2011
Status: EFFECTIVE
Effective Date: 02/01/2011

SERVICE CLASSIFICATION NO. 6 (Continued)

RATE:

The charges presented below are applicable to all customers served by this service classification. The charge for service during each billing cycle shall be for equipment in service as of the first day of that billing cycle.

A. Volumetric Charges

1. Volumetric Energy Consumption
The cumulative energy consumed by the individual luminaires is determined by the aggregation of each luminaires corresponding type and size of lamp as identified below in Table 1, Lamp Billable Wattages, multiplied by the prorated portion of the appropriate monthly hours of operation during the billing period as identified in Table 2, Hours of Operation, divided by 1,000 to yield kWh. Reference General Information, Section IV.

2. Billable Wattage
The billable wattages are presented in Table 1, below. Reference General Information, Section V.

Table 1 - Lamp Billable Wattages

Lamp Billable Wattages (Watts)

High Intensity Discharge (HID)

Lamp Type	Lamp Size (Watts)						
	70	100	150	175	250	400	1000
Mercury Vapor (MV)	-----	130	-----	211	307	477	1095
High Pressure Sodium (HPS)	86	118	173	-----	304	470	1106

3. Hours of Operation
Reference General Information, Section V.

Normal Hours of Operation
The monthly assignment of normal hours of operation is presented in Table 2, below. Reference General Information, Section V.

Continuous Hours of Operation
The monthly assignment of continuous hours of operation is presented in Table 2, below. Reference General Information, Section V.

Non-Standard Hours of Operation
Reference General Information, Section V.

Received: 02/27/2015
Status: EFFECTIVE
Effective Date: 04/01/2015

SERVICE CLASSIFICATION NO. 6 (Continued)

Table 2 - Hours of Operation

Monthly Hours of Operation (Hours)

Months	Normal Operation	Continuous Operation
January	444	744
February*	368	672
March	362	744
April	305	720
May	275	744
June	246	720
July	264	744
August	301	744
September	334	720
October	393	744
November	421	720
December	457	744
Total	4170	8760
*Leap Year Adjustment		
February	381	696
Adjusted Leap Year Total	4183	8784

4. Distribution Delivery Charge for all Load Zones, per kWh $0.05906

5. Company Supplied Electricity Supply Service Charges, per kWh
Reference General Information, Section IV.

B. Adjustment to Volumetric Charges

Reference General Information, Section IV.

Received: 02/27/2015
Status: EFFECTIVE
Effective Date: 04/01/2015

SERVICE CLASSIFICATION NO. 6 (Continued)

C. Lamp Maintenance Charges

The charges associated with the lamp maintenance presented below are applicable to all customers served by this service classification, when appropriate. Lamp maintenance charges represent the procurement of a lamp and photocontrol, removal of these existing items, installation of these new items, general cleaning of the lens(es) and the inside of the luminaire, and a visual inspection of the location. The charge for maintenance service during each billing cycle shall be one-twelfth (1/12) of the applicable annual amounts set forth herein as of the first day of such billing cycle. The lamp maintenance charges are determined by lamp type and size.

1. Normal Operation Charge
The annual lamp maintenance charges for normal operation per unit, without volumetric charges and adjustments, are presented below in Table 3. The normal operation charge is for the maintenance of lighting that is photo-electrically controlled.

Table 3 - Normal Operation Charge

Annual Normal Operation Charge, per unit ($)

Lamp Type	Lamp Size (Watts)						
	70	100	150	175	250	400	1000
Mercury Vapor (MV)	-----	6.84	-----	-----	-----	-----	-----
High Pressure Sodium (HPS)	7.91	9.07	9.54	-----	9.28	8.13	-----

2. Continuous Operation Additional Charge
The annual lamp charges for continuous operation per unit, without volumetric charges and adjustments, are presented below in Table 4. This additional charge is for the added maintenance required for the lamp being operated continuously. Lamp life is dependant on the number of hours it is operated.

Table 4 - Continuous Operation Additional Charge

Annual Continuous Operation Additional Charge, per unit ($)

Lamp Type	Lamp Size (Watts)						
	70	100	150	175	250	400	1000
Mercury Vapor (MV)	-----	7.53	-----	-----	-----	-----	-----
High Pressure Sodium (HPS)	8.71	9.98	10.50	-----	-----	-----	-----

D. Pole Attachment Charge

The monthly pole attachment charge for Company distribution poles is $0.60 per pole. This charge will be subject to adjustments made from time to time by Company.

Received: 03/29/2013
Status: EFFECTIVE
Effective Date: 04/01/2013

SERVICE CLASSIFICATION NO. 6 (Continued)

E. Other Charges and Credits

Reference General Information, Section V.

1. Outage Credit Allowance
An outage credit allowance of twenty three cents ($0.23) per lamp per night will be provided following the customer's proper notice to the Company of the luminaire malfunction (outage). The outage credit allowance will be provided for the period following the date of proper Company notice until the date the facility is operating. Reference General Information, Section V.

2. Lighting Service Charge
Reference General Information, Section V.

Lighting Service Charge, per occurrence	$129.15

3. Convenience Outlet Charge
Service to convenience (festoon) receptacle outlets under this Service Classification is closed to new applications. The company will honor existing convenience (festoon) receptacle outlet service, located on existing lighting equipment or wood poles, per the written request of the customer for the purpose of providing auxiliary, unmetered, 120VAC electric service. The customer of record with the Company for the lamp maintenance is the responsible party for all energy related charges used through the outlet(s). The energy (kWh) used through the convenience outlet(s) is billed separately under an appropriate service classification as provided within the Company's Electric Tariff.

4. Relocation of Existing Facilities
Pole replacements necessitated by the installation of customer's street lighting equipment shall be performed by Company or joint owner at customer's expense. Reference General Information, Section V.

F. Increase in Rates and Charges

Reference General Information, Section IV.

G. Non-Standard Equipment

At the sole discretion and option of the Company, the Company will provide lamp maintenance, as defined within CHARACTER OF SERVICE, to customer's Company approved lighting equipment that is not compatible to Company facilities. The customer is responsible for providing non-standard material or parts to the Company.

Received: 02/24/2012
Status: EFFECTIVE
Effective Date: 05/21/2012

SERVICE CLASSIFICATION NO. 6 (Continued)

DETERMINATION OF BILLING:

Reference General Information, Section IV.

A. Minimum Charge

The application of charges as defined under RATE for the duration of the unexpired term, utilizing the billing quantities effective at the time of termination notice, plus any balance due for service rendered. Reference General Information, Section IV.

B. Determination of Billing Quantities

Reference General Information, Section IV.

C. Terms of Payment

Reference General Information, Section IV.

D. Billing Discrepancies

1. Billing Discrepancy Notification
   Reference General Information, Section IV.

2. Customer Records
   Reference General Information, Section IV.

3. Adjustment of Previous Bills
   Reference General Information, Section IV.

4. Backbilling
   Reference General Information, Section IV.

TERM:

Term of service shall be a minimum of one (1) year. Reference General Information, Section IV.

Received: 02/24/2012
Status: EFFECTIVE
Effective Date: 05/21/2012

SERVICE CLASSIFICATION NO. 6 (Continued)

PROVISIONS:

A. General Provisions

The provisions designated in this section apply to all services of this tariff. The full definitions of the terms and conditions identified below are provided for in General Information, Section IV.

1. Company Service Liability Disclaimer
   Reference General Information, Section IV.

2. Customer Equipment Liability Disclaimer
   Reference General Information, Section IV.

3. Electrical Supply Connections
   Reference General Information, Section IV.

4. Excessive Damage to Company Facilities
   Reference General Information, Section IV.

5. Extension of Company Distribution Facilities
   Reference General Information, Section IV.

6. Legislative Hierarchy
   Reference General Information, Section IV.

7. Lighting Design Liability Disclaimer
   Reference General Information, Section IV.

Received: 02/24/2012
Status: EFFECTIVE
Effective Date: 05/21/2012

SERVICE CLASSIFICATION NO. 6 (Continued)

A. General Provisions (Continued)

8. Maintenance of Customer Owned Equipment
Reference General Information, Section IV.

9. Property Rights
Reference General Information, Section IV.

10. Service Classification Revision
Reference General Information, Section IV.

11. Service Jurisdiction
Reference General Information, Section IV.

12. Service Limitations
Reference General Information, Section IV.

13. Site Restoration
Reference General Information, Section IV.

14. Termination of Service
Reference General Information, Section IV.

15. Undergrounding of Electric Distribution System Infrastructure
Reference General Information, Section IV.

16. Vegetation Management
Reference General Information, Section IV.

B. Special Provisions:

The provisions designated in this section are applicable to this service classification. The full definitions of the terms and conditions identified below are provided for in General Information, Section V.

1. Ancillary Equipment
Reference General Information, Section V.

2. Attachments to Company Facilities
Reference General Information, Section V.

3. Authorization of Additional Facilities
Additional equipment locations or the alteration of existing equipment, considered standard at the time of customer’s request, may be installed subject to Company approval prior to installation. Written request by the customer may be required by the Company and if accepted by the Company may be appended to customer's Form "SL6", Application for Service. A revised Schedule "SL6" may also be required by the Company.

Received: 02/24/2012
Status: EFFECTIVE
Effective Date: 05/21/2012

SERVICE CLASSIFICATION NO. 6 (Continued)

B. Special Provisions (Continued)

4. Customer Equipment Audit
An audit may be conducted by Company, or its designee, and customer's representatives of customer's street lighting system. If additional lamps have been installed without notification to Company, the Company will bill the customer for electrical service connection, monthly pole attachment charges and energy as though the lamps were installed at the time of the last audit.

5. Customer Equipment Identification
At the option of the Company, customer-owned equipment may require the installation of a red plastic band or red tape affixed to equipment for ownership identification purposes. Reference General Information, Section V.

6. Customer Responsibilities
All maintenance shall be performed by customer, except as defined under CHARACTER OF SERVICE. Reference General Information, Section V.

7. Facility/Equipment Obsolescence
Reference General Information, Section V.

8. Facility Service Limitation
Reference General Information, Section V.

9. Schedule “SL6” Revision
Whenever during any month lamps and/or equipment are installed, removed or replaced, Company may prepare and supply to customer a revised Schedule "SL6" to reflect such changes.

Received: 01/31/2011
Status: EFFECTIVE
Effective Date: 02/01/2011

SERVICE CLASSIFICATION NO. 6 (Continued)

NIAGARA MOHAWK POWER CORPORATION d/b/a NATIONAL GRID
P.S.C. NO. 214 ELECTRICITY - S.C. NO. 6
FORM "SL6" - APPLICATION FOR SERVICE

APPLICATION FOR SERVICE IS SUSPENDED AS OF FEBRUARY 1, 2011

BY AND BETWEEN NIAGARA MOHAWK POWER CORPORATION AND

_____ _____ (hereinafter called “Applicant”)
(Applicant Name) (Mailing Address)

_____ _____
(Lighting District Reference) (LD Reference No.)

Date: _____ , _____

The _____ of _____ County, New York, (hereinafter called "Applicant"), pursuant to the attached authorization dated _____, hereby applies to NIAGARA MOHAWK POWER CORPORATION (hereinafter called "Company"), to supply electrical energy and provide lamp maintenance to Applicant’s electric lighting system along the streets, roads, highways and/or other public places in _____.

Upon acceptance by Company, this application shall constitute an agreement and contract for the furnishing of street lighting service in accordance with the terms and conditions set forth in Service Classification No. 6 of the Company's Schedule of P.S.C. No. 214 Electricity as now on file with the Public Service Commission of the State of New York, or in accordance with the same as from time to time changed or amended and made effective in accordance with the rules of the Commission. This agreement and contract shall be effective for the period of _____year(s) from _____ and thereafter until canceled by either party as provided for in the Service Classification.

Applicant shall pay for the service as described in Schedule “SL6" and the amount set forth in its attachment dated _____ , _____ appended hereto and made a part hereof for the lamps installed or to be installed at the effective date hereof, and whenever the lamps installed are subsequently increased in size, increased in number, or decreased in number, as provided in the Service Classification, Applicant shall pay for the service in accordance with the listing of lamps and other charges set forth upon a revised Schedule “SL6", which shall at its effective date supersede Schedule “SL6" theretofore in effect.

Each party shall secure compensation and pay or provide the same in the manner and to the extent provided for by applicable provisions of the Worker’s Compensation Law for the benefit of its own employees, having employments within the provisions of the law and engaged in the performance of the agreement, on account of injuries arising out of or in the course of their employments. Neither party shall assign, transfer, convey, sublet or otherwise dispose of the agreement or its right, title or interest therein, or its power to execute the same to any person, company or corporation without previous consent of the other party; provided that a consolidation or merger in which the party participates shall not be deemed to be within the provisions of this paragraph.

Received: 01/31/2011
Status: EFFECTIVE
Effective Date: 02/01/2011

SERVICE CLASSIFICATION NO. 6 (Continued)

Company shall not, without the prior written consent of the officer, board or agency awarding this contract, assign, transfer, convey, sublet or otherwise dispose of its contract or its right, title or interest therein or its power to execute such contract to any other person or corporation except that consent is hereby given by the officer, board or agency awarding this contract to Company to sublet from time to time the installation or maintenance of the facilities required, provided, however, that such consent shall in no way relieve the Company of any of its obligations to Applicant under the terms and provisions of this contract.

All previous agreements and contracts between the parties or their predecessors covering all or a portion of the services provided herein shall terminate on the effective date of this application, except that the obligation of Applicant to pay for services theretofore rendered under any such prior agreements and contracts shall survive.

ATTEST:

_____
(Signature)

_____
(Print Name)

APPLICANT'S DULY AUTHORIZED REPRESENTATIVE

By_____
(Signature)

_____
(Print Name)

_____
(Title)

_____
(Date)

ACCEPTED:
NIAGARA MOHAWK POWER CORPORATION

By_____
(Signature)

_____
(Print Name)

_____
(Title)

_____
(Date)

Received: 01/31/2011
Status: EFFECTIVE
Effective Date: 02/01/2011

SERVICE CLASSIFICATION NO. 6 (Continued)

NIAGARA MOHAWK POWER CORPORATION d/b/a NATIONAL GRID P.S.C. NO. 214 ELECTRICITY, S.C. NO. 6 SCHEDULE SL6	CUSTOMER NAME	BILL ACCOUNT NUMBER
	LIGHTING DISTRICT REFERENCE	LD REFERENCE NO.
SERVICE AGREEMENT DATE	EFFECTIVE BILL PERIOD (mo/yr)	CSS ORDER NO.
SUPERSEDING PREVIOUS SCHEDULE M6 OR SCHEDULE SL6 DATED: _____		

DESCRIPTION	Qty Unit Chg (+/-)	Qty Bill Total	DESCRIPTION	Qty Unit Chg (+/-)	Qty Bill Total	DESCRIPTION	Qty Unit Chg (+/-)	Qty Bill Total
LAMP MAINTENANCE			LAMP MAINTENANCE			POLE ATTACHMENT		
Normal Hours of Operation			Continuous Hours of Operation-Added Charge			Pole Attachment Fee		
Mercury Vapor			Mercury Vapor					
LP MV 100			LP MV 100 24HR					
LP MV 175			LP MV 175 24HR					
LP MV 250			LP MV 250 24HR					
LP MV 400			LP MV 400 24HR			Non-Standard Items		
LP MV 1000			LP MV 1000 24HR					
High Pressure Sodium			High Pressure Sodium			OTHER CHARGES AND CREDITS		
LP HS 70			LP HS 70 24HR			Lighting Svc Charge		
LP HS 100			LP HS 100 24HR					
LP HS 150			LP HS 150 24HR					
LP HS 250			LP HS 250 24HR					
LP HS 400			LP HS 400 24HR					
LP HS 1000			LP HS 1000 24HR					

Received: 01/31/2011
Status: EFFECTIVE
Effective Date: 02/01/2011

SERVICE CLASSIFICATION NO. 6 (Continued)

SIGNED: _____ APPROVED: _____
(Customer Representative) (Designation of Authority)

PRINT NAME: _____ PRINT NAME: _____

DATE: _____ DATE: _____

The parties agree that if this is a superseding Schedule SL6 then it shall supersede any previous Schedule M6 or Schedule SL6 in effect and shall be made a part of the Service Agreement between the customer and the Company.

Received: 08/20/2009
Status: EFFECTIVE
Effective Date: 11/16/2009

SERVICE CLASSIFICATION NO. 6 (Continued)

RESERVED FOR FUTURE USE

Received: 08/20/2009
Status: EFFECTIVE
Effective Date: 11/16/2009

SERVICE CLASSIFICATION NO. 6 (Continued)

RESERVED FOR FUTURE USE

Received: 08/20/2009
Status: EFFECTIVE
Effective Date: 11/16/2009

SERVICE CLASSIFICATION NO. 6 (Continued)

RESERVED FOR FUTURE USE

Received: 08/20/2009
Status: EFFECTIVE
Effective Date: 11/16/2009

SERVICE CLASSIFICATION NO. 6 (Continued)

RESERVED FOR FUTURE USE

Received: 08/20/2009
Status: EFFECTIVE
Effective Date: 11/16/2009

SERVICE CLASSIFICATION NO. 6 (Continued)

RESERVED FOR FUTURE USE

Received: 08/20/2009
Status: EFFECTIVE
Effective Date: 11/16/2009

SERVICE CLASSIFICATION NO. 6 (Continued)

RESERVED FOR FUTURE USE

Received: 08/20/2009
Status: EFFECTIVE
Effective Date: 11/16/2009

SERVICE CLASSIFICATION NO. 6 (Continued)

RESERVED FOR FUTURE USE

Received: 08/20/2009
Status: EFFECTIVE
Effective Date: 11/16/2009

SERVICE CLASSIFICATION NO. 6 (Continued)

RESERVED FOR FUTURE USE

Appendix F – National Grid Street Lighting Standards

This document contains information that is provided for reference purposes only, and should not be construed or used as a substitute for an analysis of the applicable tariffs, agreements, and safety regulations specific to each particular customer.

1. SAFETY:

The number 1 priority of every job is:

SAFETY!

National Grid's distribution poles carry electric lines that operate at voltages as high as 34,500 volts and can carry very high amperages.

National Grid's underground infrastructure carries the same very high distribution voltages and amperages in a confined space, and may also carry sub-transmission or transmission lines that operate at even higher voltage levels.

Outdoor lights are installed within the electric space on a distribution pole. Performing work on outdoor lights may require the worker to be in close proximity to the distribution lines.

It is the responsibility of the customer that owns and maintains outdoor lighting to insure that all personnel working on the outdoor lighting system are qualified to work in the designated electric supply space on a distribution pole in accordance with OSHA 1910.269.

OVERHEAD DISTRIBUTION
No customer, customer's employees, or contractors are ever allowed to perform any work on National Grid 120/240 volt or 120/208 volt secondary conductors.

UNDERGROUND DISTRIBUTION
No customer, customer's employees, or contractors are ever allowed to enter a National Grid manhole or handhole for any reason without National Grid safety supervision personnel being present on site.

IF UNSURE: - **STOP** – Call National Grid for assistance.

No outdoor lighting repair is too important to sacrifice personal safety.

2. **GENERAL:** These Standards identify requirements to enable a customer to safely install, remove, and maintain a customer owned outdoor lighting system which is installed on National Grid distribution poles and connected to National Grid overhead or underground secondary conductors.

Standards: All customer owned outdoor lighting shall be in compliance with the applicable provisions of the National Electric Safety Code, (NESC) latest edition, and the applicable National Grid Construction Standards.

Note: (As of July 1, 2014, the latest edition of the NESC is the 2012 edition)

Customer Owned Equipment: The customer shall be responsible to own, operate, and maintain all outdoor lighting equipment beyond the service tap connections to National Grid. This shall include, but not be limited, to the following:

1. Supplying all material and labor.
2. Transferring an overhead supplied outdoor light attachment to a new pole in the event of a pole replacement.
3. Relocating an overhead supplied outdoor light attachment to accommodate other construction activities on the pole.
4. Performing any work required on the outdoor lighting underground conduit system, conductors, foundation, pole, arm and luminaire.
5. Emergency 24 hour response to remove or make safe the outdoor light attachment in the event of a broken pole.

NOTE: In an emergency, National Grid personnel may perform, at customer expense, any customer outdoor lighting work National Grid deems necessary to maintain public or employee safety.

Electrical Separation: The customer is responsible to create an electrical separation between the National Grid secondary conductors and the customer owned outdoor lighting conductors. This is required to insure the safety of National Grid and customer employees. It also clearly defines where National Grid ownership ends and customer ownership begins. This is accomplished by installing a dual pole in-line fuse holder with a midget cartridge style fuse on every outdoor light supply located as near as possible to the connection to the National Grid owned secondary conductors. This fuse, in addition to providing electrical protection, shall serve as a future disconnect point for the customer owned outdoor light. Once installed, the customer may disconnect or reconnect a customer owned outdoor light only by means of the in-line fuse holder. See Figure 6 for overhead supplied outdoor lights, and Figures 7, 8, 9, or 10 for underground supplied outdoor lights. See Figure 12 for in-line fused disconnect details.

Ownership Identification: The customer is responsible to label all customer owned outdoor lighting luminaires in accordance with National Grid Construction Standards. See Figures 1 and 2.

Worker Qualifications: All customer work shall be completed only by personnel qualified to work in the electric supply space on a distribution pole (herein referred to as “Qualified Worker”) in accordance with OSHA 1910.269. An executed copy of the OSHA 1910-269 ACKNOWLEDGEMENT FOR THE USE OF QUALIFIED ELECTRICAL WORKERS form is mandatory.

Final Connections to National Grid 120/240 VAC or 120/208 VAC Secondary Conductors: For OVERHEAD supplied lighting, National Grid will permit a Qualified Worker to make all connections and disconnections of customer owned outdoor light supply conductors to the company owned secondary and grounding conductors. For UNDERGROUND supplied lighting, National Grid will permit a Qualified Worker to make all connections and disconnections of customer owned outdoor light supply conductors to the company owned secondary and grounding conductors provided that National Grid personnel are present to provide safety supervision and access to the underground facilities.

3. CONSTRUCTION DRAWINGS:

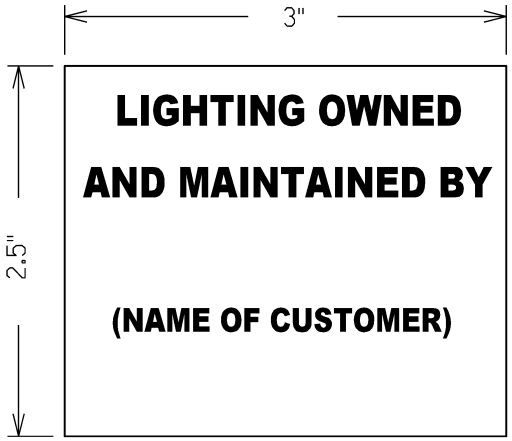

Figure 1 – Ownership Identification Label for Customer Owned Outdoor Luminaires

1. All customer owned outdoor light luminaires shall be identified with a label to clearly define ownership and maintenance responsibilities.

2. Ownership identification labels shall be reflective white with black lettering. See Figure 1.

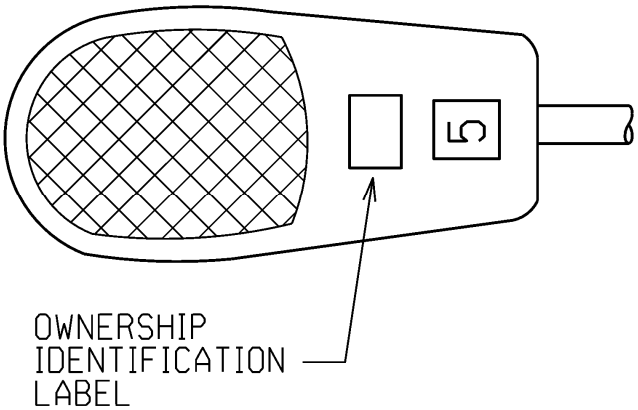

Figure 2 – Installation of Ownership Identification Label

1. Ownership identification label shall be installed on the lower door of a horizontal roadway luminaire such that it is clearly visible from the ground. See Figure 2.

2. For post top, floodlight, and other luminaires, the ownership identification label shall be installed on the luminaire housing in a location such that it is clearly visible from the ground.

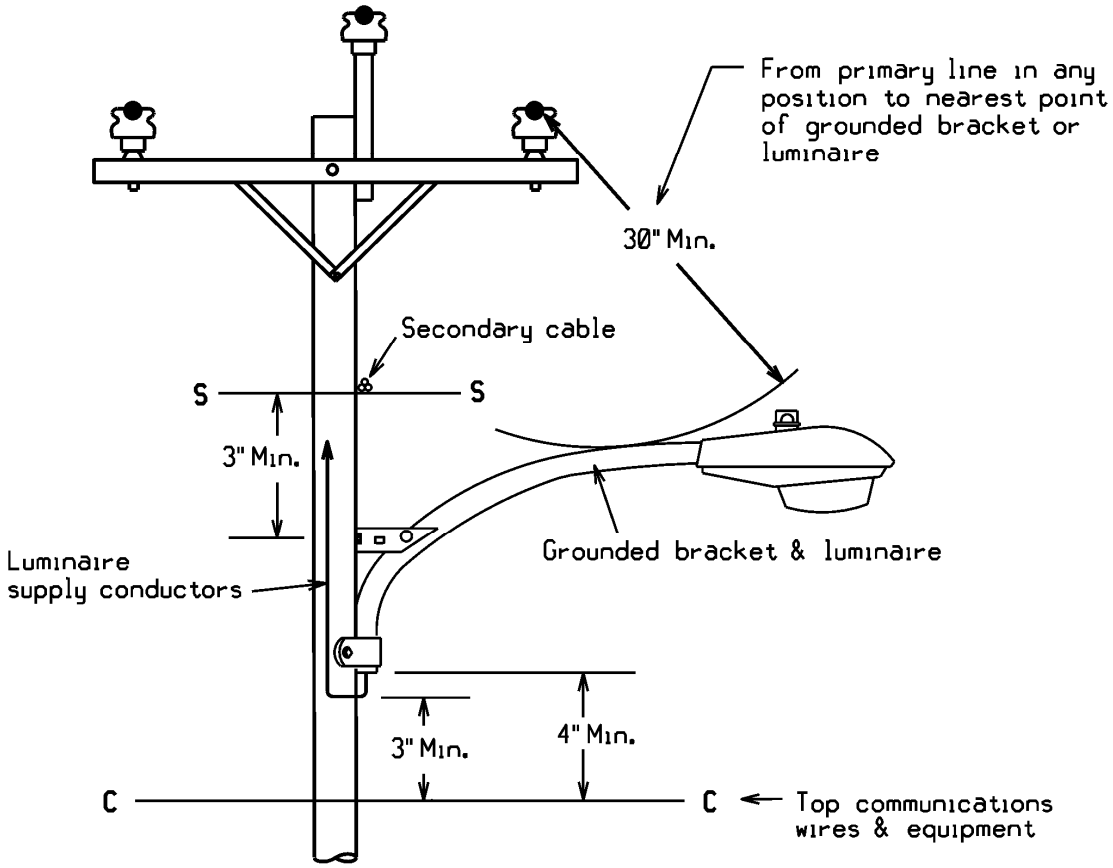

Figure 3 – Outdoor Light Clearance from Overhead Conductors

1. Primary Conductors – Maintain minimum 30-inch clearance from any primary conductor or cable to nearest point of grounded luminaire or bracket.

2. Secondary Conductors – Maintain minimum 3-inch vertical clearance from secondary wires or cable to nearest point of grounded luminaire bracket. (NESC Table 239-1)

3. Communications Cables – Maintain minimum 4-inch vertical clearance from closest communication cable to nearest point of grounded luminaire bracket. (NESC Table 238-2)

   Maintain minimum 3-inch clearance from closest communications cable to nearest point of luminaire supply conductors drip loop. Luminaire supply conductors must be covered with non-metallic flexible conduit. (NESC 238D)

4. Location on Pole – Always install the outdoor light BELOW the secondary conductors. This applies to new installations and any time an existing outdoor light is relocated or transferred to a new pole.

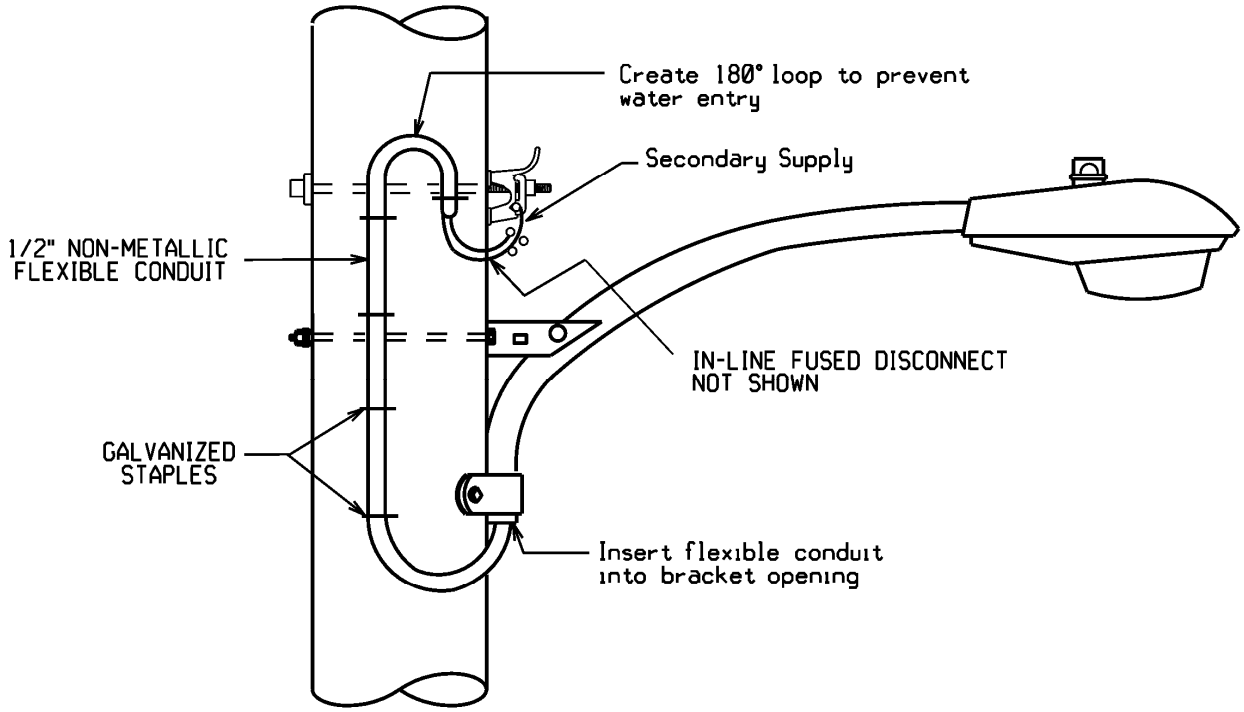

Figure 4 - Mechanical Protection for Overhead Supplied Outdoor Light Fixture Conductors

1. NESC Table 239G1 requires that all luminaire supply conductors (#10 AWG) shall have mechanical protection (1/2" non-metallic flexible conduit) installed from the point where they leave the pole end of the bracket to the connection to the secondary supply in order to take advantage of the clearance dimensions shown on page 5.

2. Insert the non-metallic flexible conduit into the bracket opening and extend up the pole to the secondary supply.

3. Create a 180 degree loop at the secondary supply to prevent rain water from entering and becoming trapped inside the flexible conduit.

4. Secure the non-metallic flexible conduit with galvanized staples spaced 12-inches apart or closer as necessary.

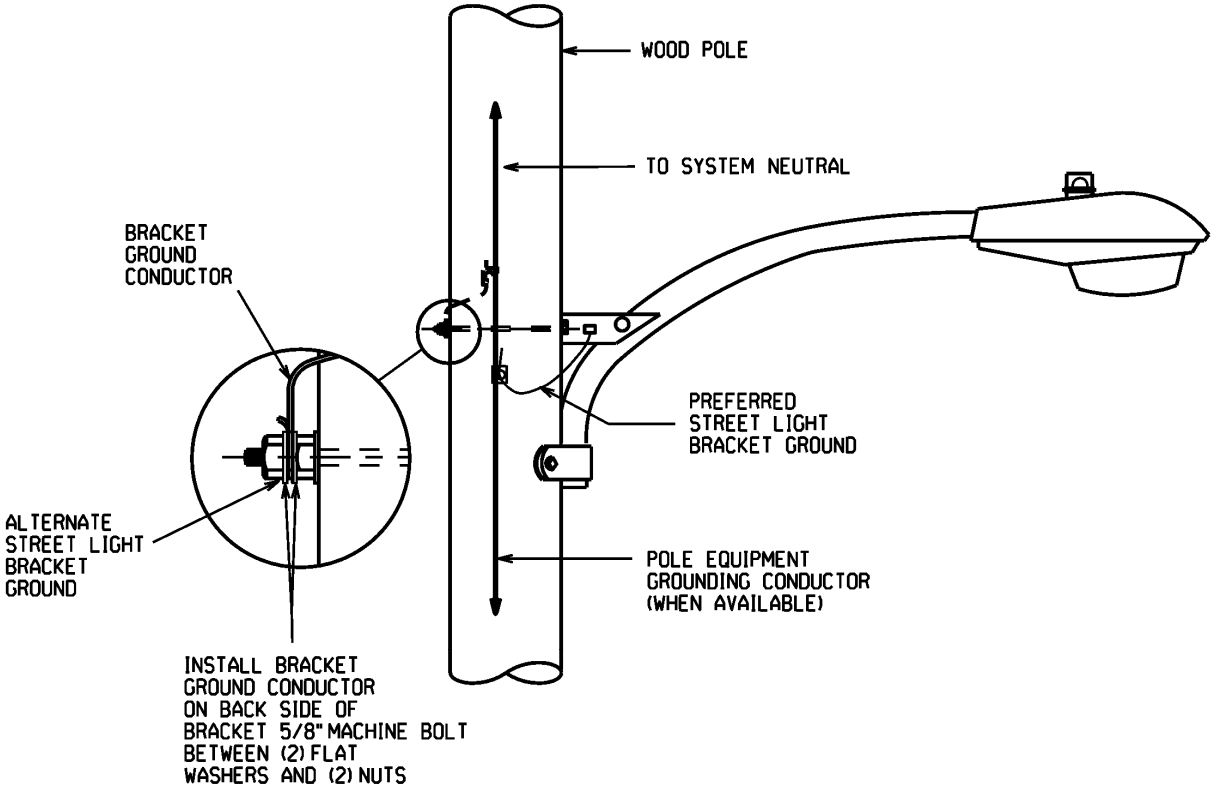

Figure 5 – Grounding of Overhead Supplied Outdoor Light

1. Every outdoor light bracket shall be grounded. Install a #4 AWG stranded copper conductor with enough length to connect to the pole equipment grounding conductor (when available) or to the secondary system neutral. Final connections to National Grid conductors may be made by a Qualified Worker.

2. Many brackets have a bracket grounding bolt located near the wood pole end of the bracket. If none exists, install a bracket grounding bolt on the bracket or connect grounding conductor to the back side of the 5/8" square head machine bolt which secures the bracket to the pole.

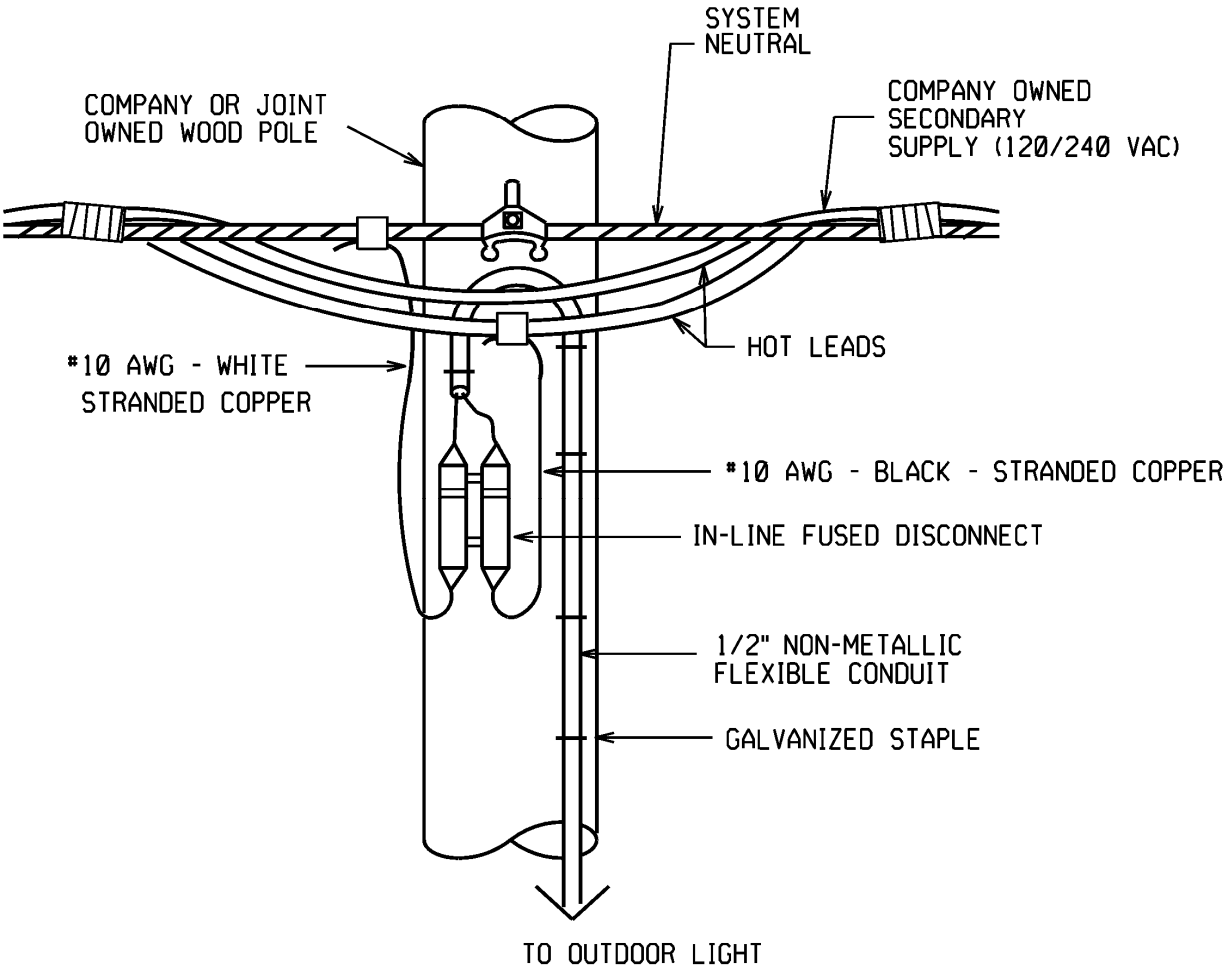

Figure 6 – Connection of Overhead Supplied Customer Owned Outdoor Light to National Grid Overhead Secondary Conductors

1. Every customer outdoor light shall have an in-line fused disconnect as described in “Electrical Separation” on page 3. See page 14 for details on the in-line fused disconnect.

2. Secure the in-line fused disconnect to the pole using a spring loaded conduit clip or galvanized staple.

3. Provide sufficient slack in the luminaire wiring to facilitate fuse replacement.

4. Outdoor lighting fixture wiring shall be #10 AWG 7-strand copper BLACK-WHITE with RHH/RHW/USE-2 insulation.

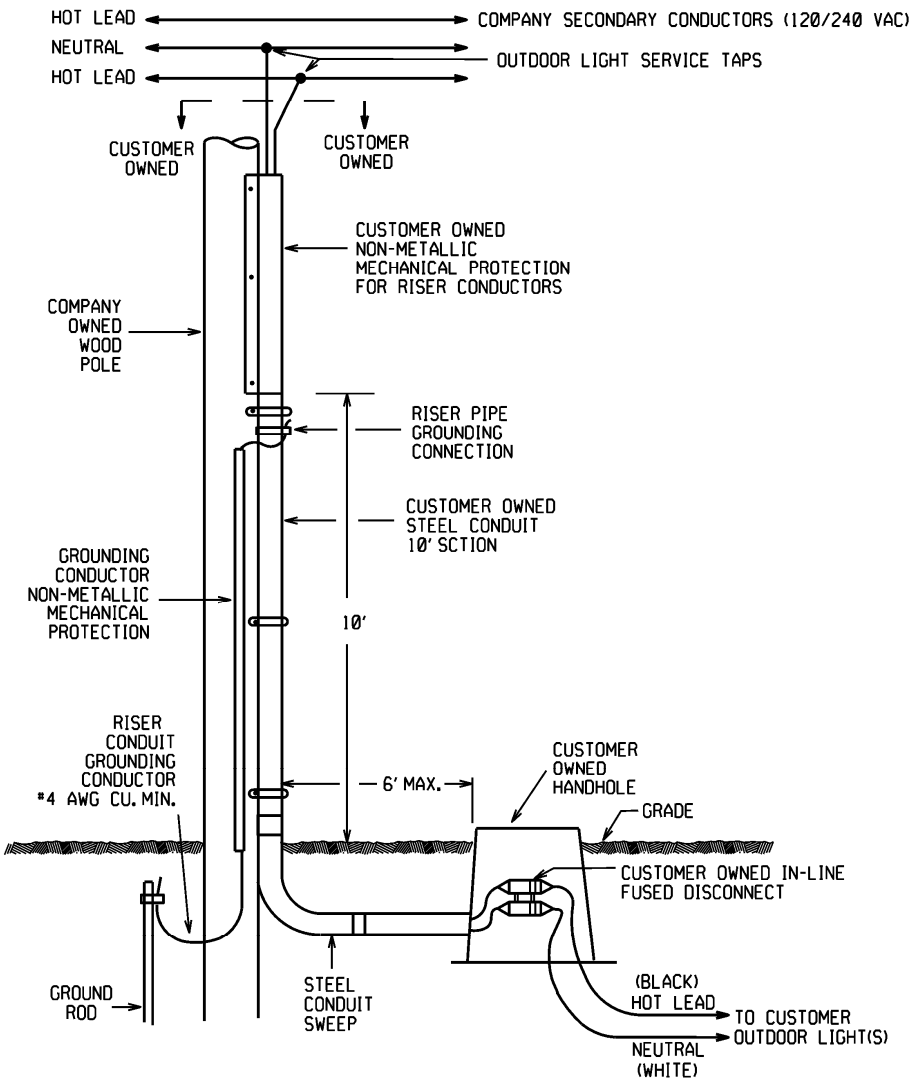

Figure 7 – Connection of Customer Owned Outdoor Lighting Riser to National Grid Overhead Secondary Conductors

1. Install customer owned handhole as shown in Figure 7. Customer owned handhole shall house the in-line fused disconnect. See page 14 for details on the in-line fused disconnect.

2. Always install the riser conduit away from vehicle traffic.

3. No more than (2) riser conduits may be attached to a pole. Consult National Grid Engineering if more than (2) risers are desired.

4. Underground supply conductors shall be #6 AWG 7-strand copper (minimum) with RHH/RHW/USE-2 insulation. Conductors shall be color coded BLACK = Hot lead, WHITE = Neutral.

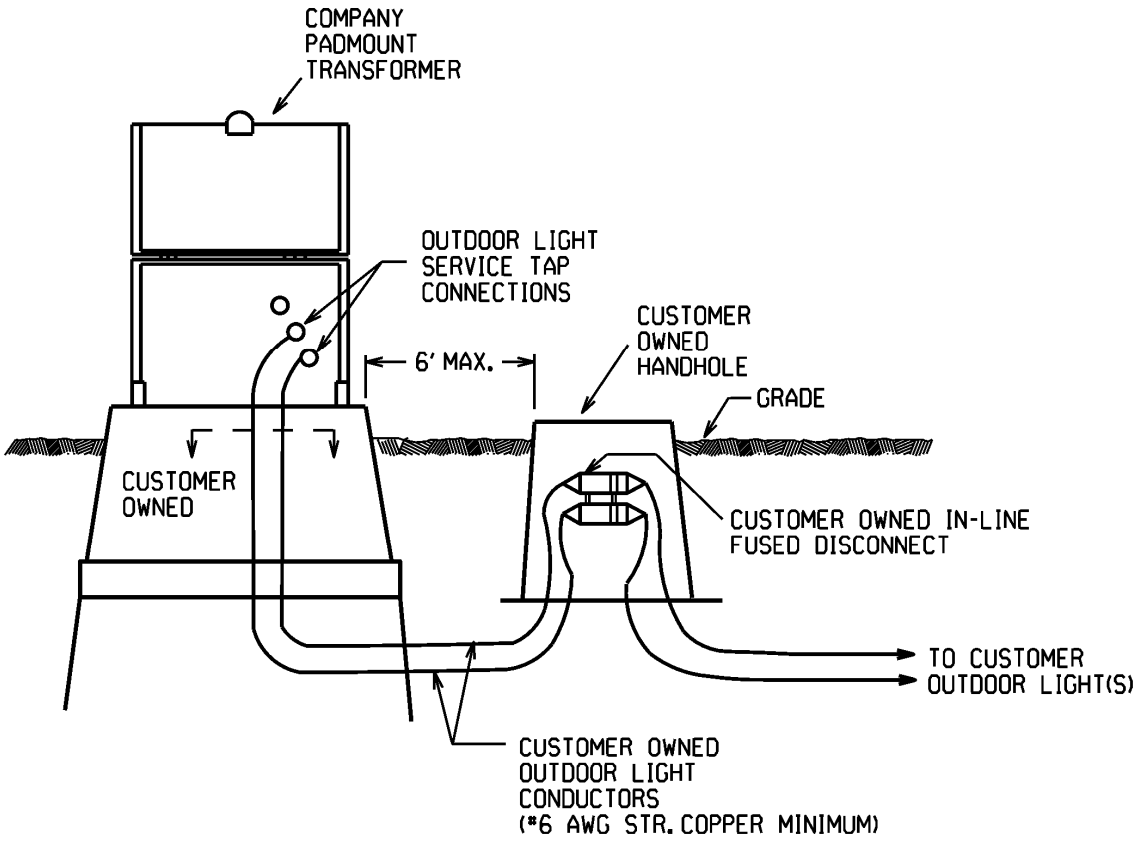

Figure 8 – Connection of Underground Supplied Street Light to National Grid Padmount Transformer

1. Install customer owned handhole as shown in Figure 8. Customer owned handhole shall house the in-line fused disconnect. See page 14 for details on the in-line fused disconnect.

2. Underground supply conductors shall be #6 AWG 7-strand copper (minimum) with RHH/RHW/USE-2 insulation. Conductors shall be color coded BLACK = Hot lead, WHITE = Neutral.

3. In cases where a new customer conduit is to be installed into a National Grid padmount transformer, National Grid shall determine the conduit entrance location at the padmount transformer foundation. The customer shall install the conduit to just outside this location. National Grid shall then create the opening in the padmount foundation and extend the customer conduit into the padmount foundation.

4. All electrical connections or disconnections to the secondary supply may be performed by a Qualified Worker, however, in every case, National Grid personnel shall be present to provide safety supervision and to unlock and relock the padmount transformer.

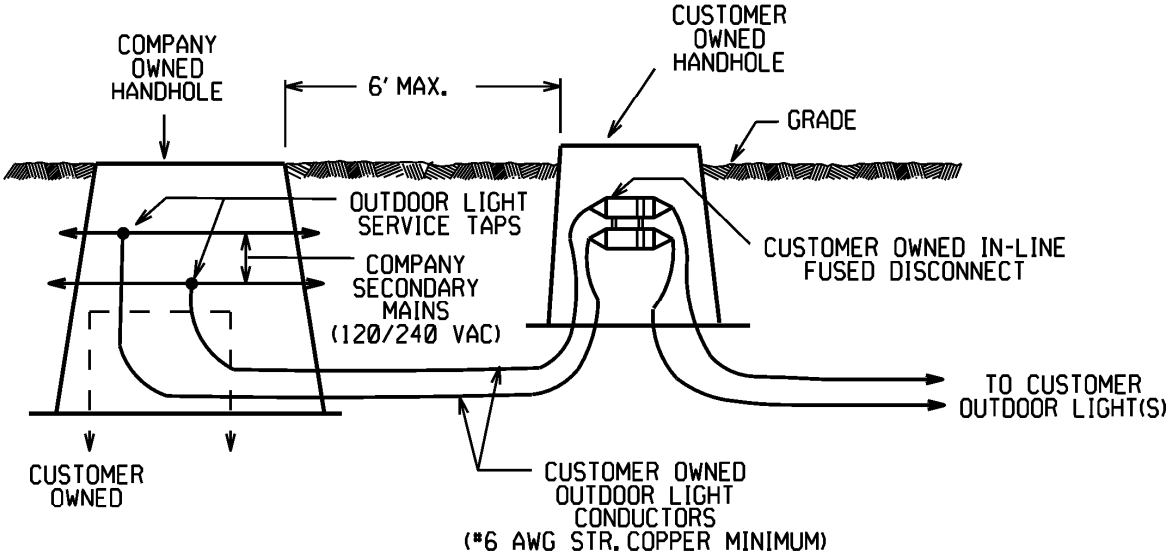

Figure 9 – Connection of Underground Supplied Customer Owned Outdoor Lighting to National Grid Handhole or Manhole – Standard Connection

1. Install customer owned handhole as shown in Figure 9. Customer owned handhole shall house the in-line fused disconnect. See page 14 for details on the in-line fused disconnect.

2. Underground supply conductors shall be #6 AWG 7-strand copper (minimum) with RHH/RHW/USE-2 insulation. Conductors shall be color coded BLACK = Hot lead, WHITE = Neutral.

3. In cases where a new customer conduit is to be installed into a National Grid manhole or handhole, National Grid shall determine the conduit entrance location in the manhole/handhole, The customer shall install the conduit to just outside this location. National Grid shall then create the opening in the manhole/handhole wall and extend the customer conduit into the manhole/handhole.

4. All electrical connections or disconnections to the secondary supply may be performed by a Qualified Worker, however, in every case National Grid personnel shall be present to provide safety supervision.

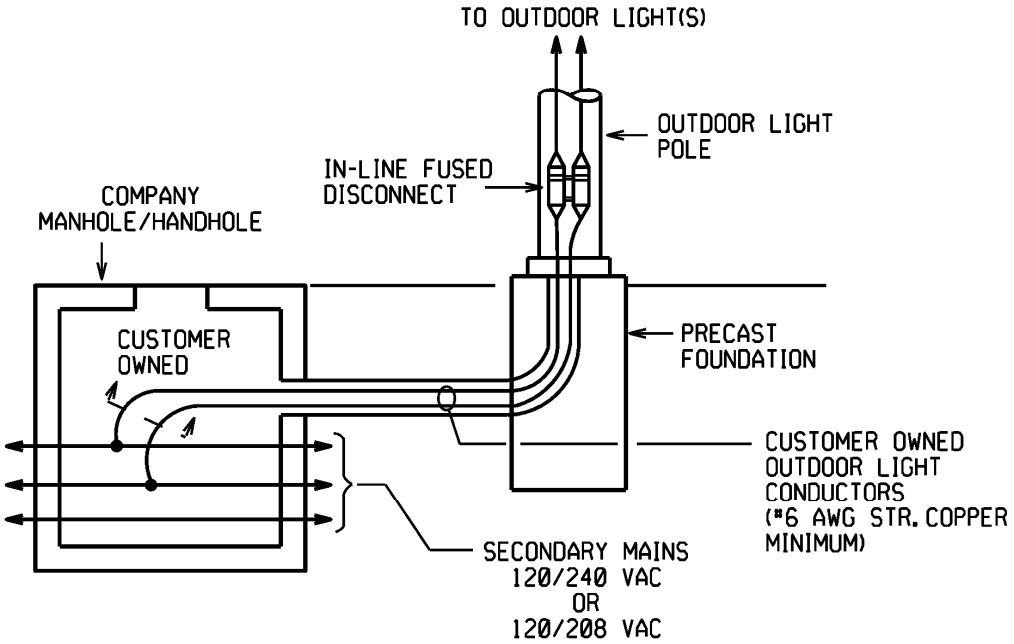

Figure 10 – Connection of Underground Supplied Customer Owned Outdoor Light to National Grid Handhole or Manhole – Non-Standard Connection

1. For all new installations and modifications to existing installations, the customer is required to install an in-ground handhole located as close as possible to the company provided electrical source point, as illustrated in Figures 7, 8, and 9.

2. In the rare case where the customer owned concrete outdoor lighting foundation is immediately adjacent to the National Grid manhole/handhole, installation of an in-ground customer owned handhole may be impossible. In this case, the in-line fused disconnect may be installed inside the pole access handhole. **This is allowed only in cases where no physical space exists to install the in-ground customer owned handhole.** Note that the #6 AWG underground supply conductors between the manhole and the base of the outdoor light are customer owned.

3. Underground supply conductors shall be #6 AWG 7-strand copper (minimum) with RHH/RHW/USE-2 insulation. Conductors shall be color coded BLACK = Hot lead, WHITE = Neutral.

4. In cases where a new customer conduit is to be installed into a National Grid manhole or handhole, National Grid shall determine the conduit entrance location in the manhole/handhole, The customer shall install the conduit to just outside this location. National Grid shall then create the opening in the manhole/handhole wall and extend the customer conduit into the manhole/handhole.

5. All electrical connections or disconnections to the secondary supply may be performed by a Qualified Worker, however, in every case National Grid personnel shall be present to provide safety supervision.

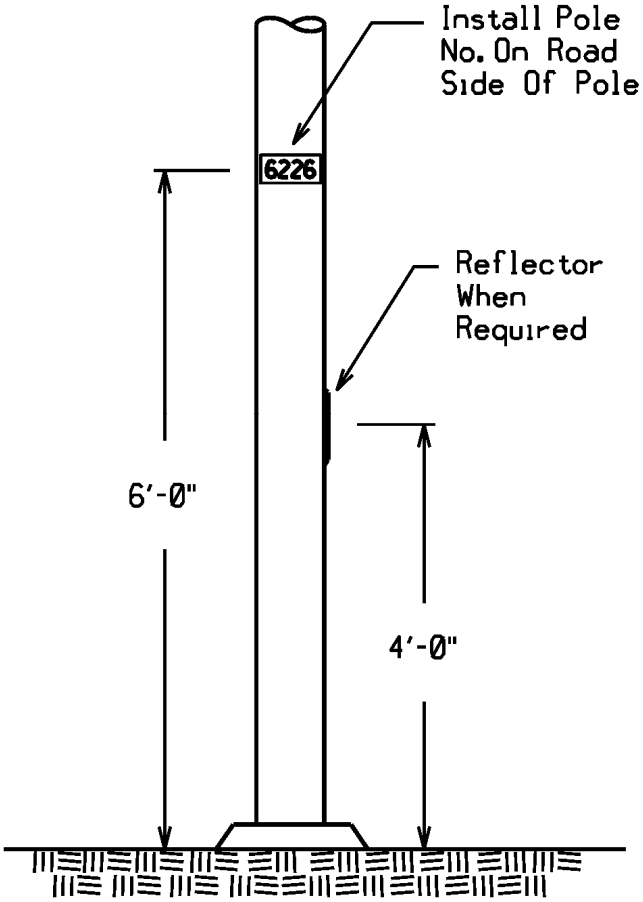

Figure 11 – Pole Numbering - Underground Supplied Customer Owned Lighting

1. Every underground supplied customer lighting pole shall be numbered in accordance with Figure 11.
2. Always use 1-3/4-inch x 3-inch, high intensity white reflective pole number decals.
3. Pole number decals shall be installed horizontal to each other as shown in Figure 11 – not vertical.

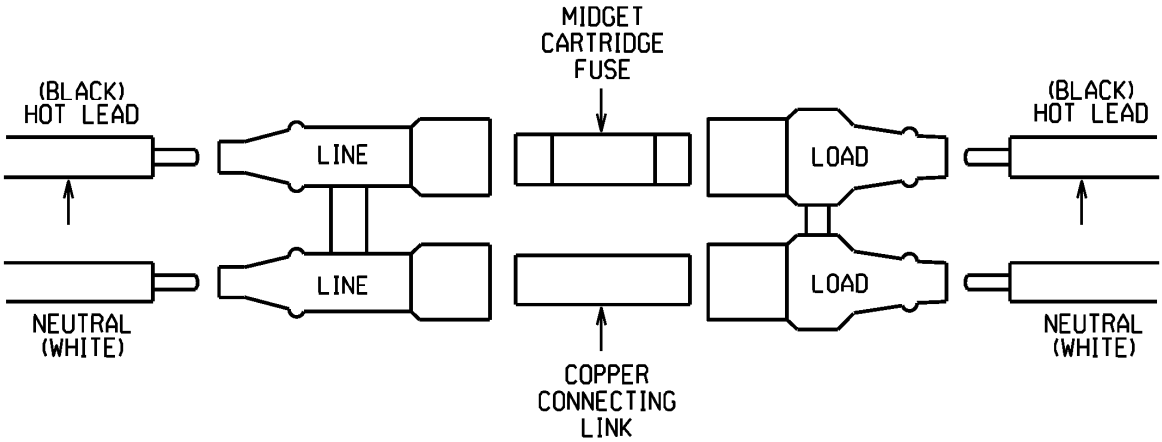

Figure 12 – In-Line Fused Disconnect Details

1. All customer owned outdoor lighting equipment shall be fused using a dual pole, watertight, in-line fuse holder and cartridge style fuse. This fuse, in addition to providing electrical protection, shall serve as a disconnection point for the customer owned outdoor lighting equipment.

2. Fuse Holder
   The fuse holder shall be a watertight device suitable for use in an outdoor environment.

   The fuse holder shall be totally insulated, thus having no exposed energized parts.

   The fuse holder shall accept #14 AWG - #6 AWG stranded copper conductors on both ends.

   The fuse holder shall be a dual pole device allowing simultaneous disconnection of both the 120 VAC hot lead (black wire) and the neutral conductor (white wire).

   The fuse holder shall be designed such that, when separated, the midget cartridge fuse and copper connecting link shall be held captive in the load end of the fuse holder.

   The fuse holder shall be polarized to prevent accidental reversal of the live leg and neutral connections.

3. Cartridge Fuse
   The fuse shall be a non-glass type, midget style cartridge fuse. Fuse dimensions shall be 13/32” diameter x 1½” length.

4. Neutral Connection
   The neutral conductor shall not be fused. Install a 13/32” diameter x 1½” length copper connecting link in place of a cartridge fuse.

5. Always provide sufficient slack in wiring to facilitate fuse replacement.

Appendix G – Street Lighting Design Documents

Typical 70 watt HPS Street Lights replaced with 24 watt LED Street Lights

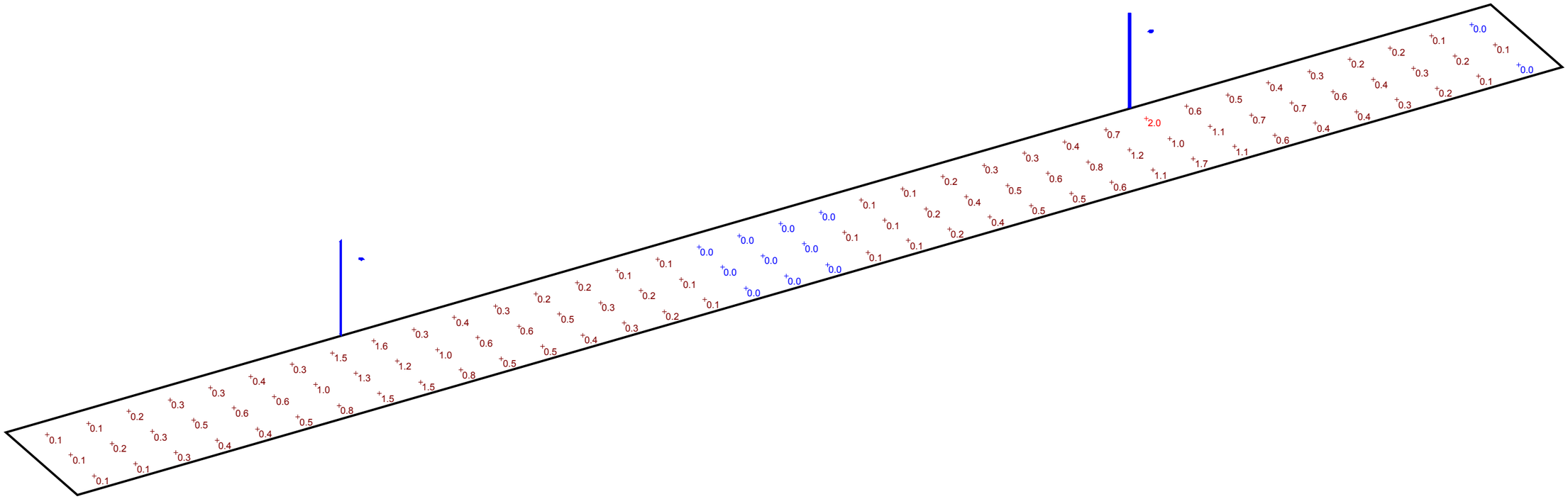

Statistics						
Description	Symbol	Avg	Max	Min	Max / Min	Avg / Min
Typical 70 Replacement	+	0.4 fc	2.0 fc	0.0 fc	N/A	N/A

Village of Cazenvoia
Proposed Exterior Lighting
Typical 70 watt HPS Street Lights replaced with 24 watt LED Street Lights

Designer
SmartWatt
Date
6/23/2017
Scale
Not to Scale
Drawing No.

Typical 100 watt HPS Street Lights replaced with 40 watt LED Posttop Retro Kit

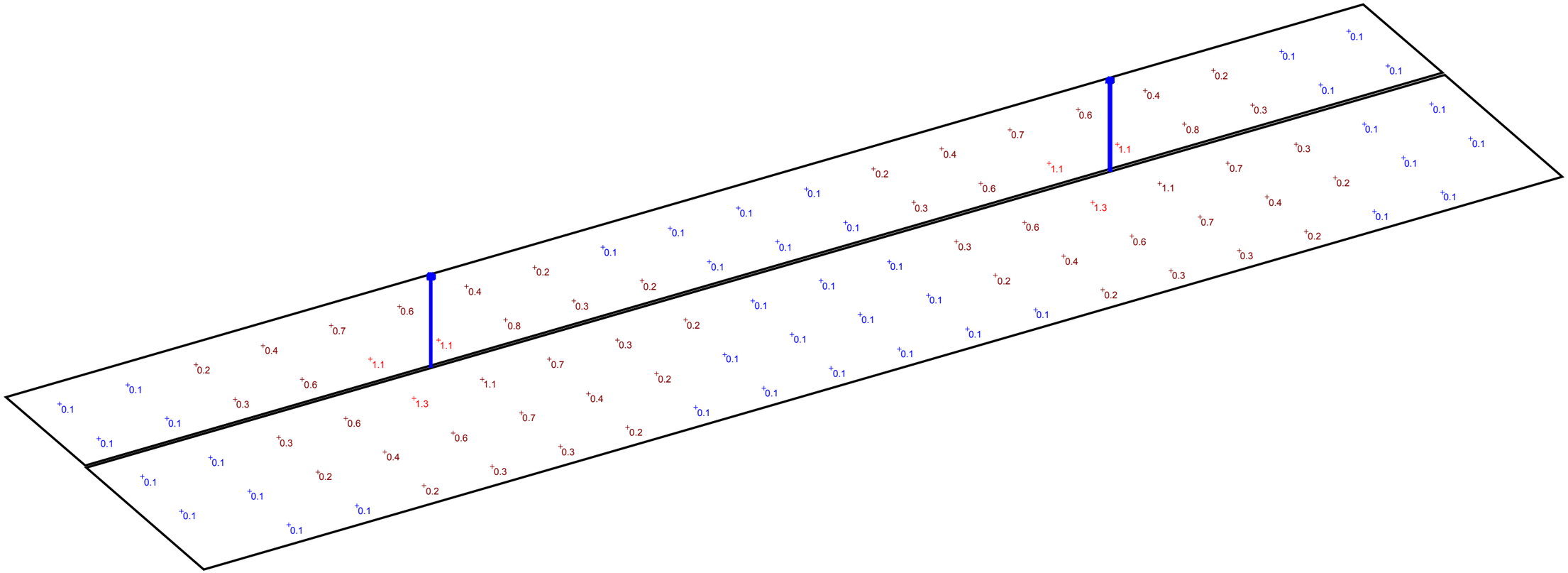

Statistics

Description	Symbol	Avg	Max	Min	Max / Min	Avg / Min
Roadway	+	0.3 fc	1.3 fc	0.1 fc	13.0:1	3.0:1
Sidewalk	+	0.4 fc	1.1 fc	0.1 fc	11.0:1	4.0:1

Village of Cazanovia
Proposed Exterior Lighting
Typical 100 watt HPS Street Lights replaced with 40 watt LED Posttop Retro Kit

Designer
SmartWatt
Date
6/26/2017
Scale
Not to Scale
Drawing No.

Typical 150 watt HPS Street Lights replaced with 40 watt LED Posttop Retro Kit

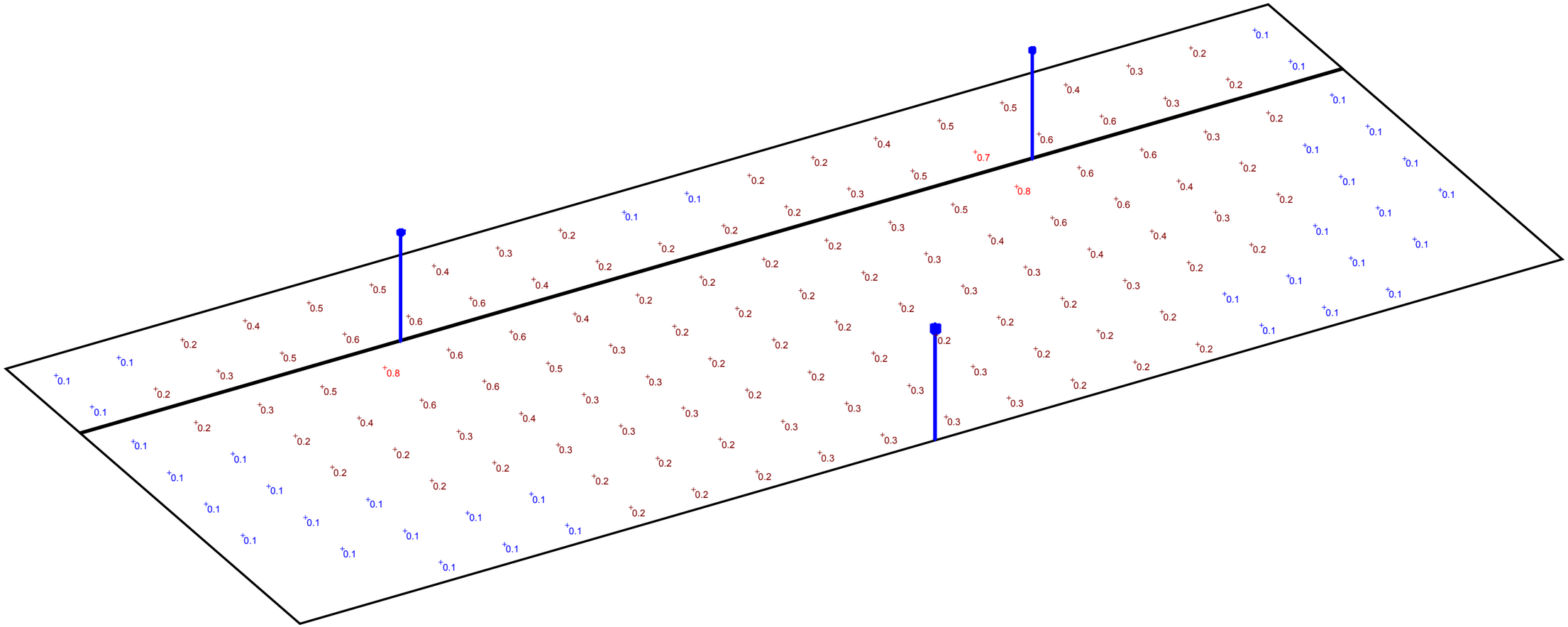

Statistics

Description	Symbol	Avg	Max	Min	Max / Min	Avg / Min
Roadway	+	0.3 fc	0.8 fc	0.1 fc	8.0:1	3.0:1
Sidewalk	+	0.3 fc	0.7 fc	0.1 fc	7.0:1	3.0:1

Village of Cazenovia
Proposed Exterior Lighting
Typical 150 watt HPS Street Lights replaced with 40watt LED Posttop Retro Kit

Designer
SmartWatt
Date
6/26/2016
Scale
Not to Scale
Drawing No.

Typical 100 watt HPS Street Lights replaced with 40 watt LED Street Lights

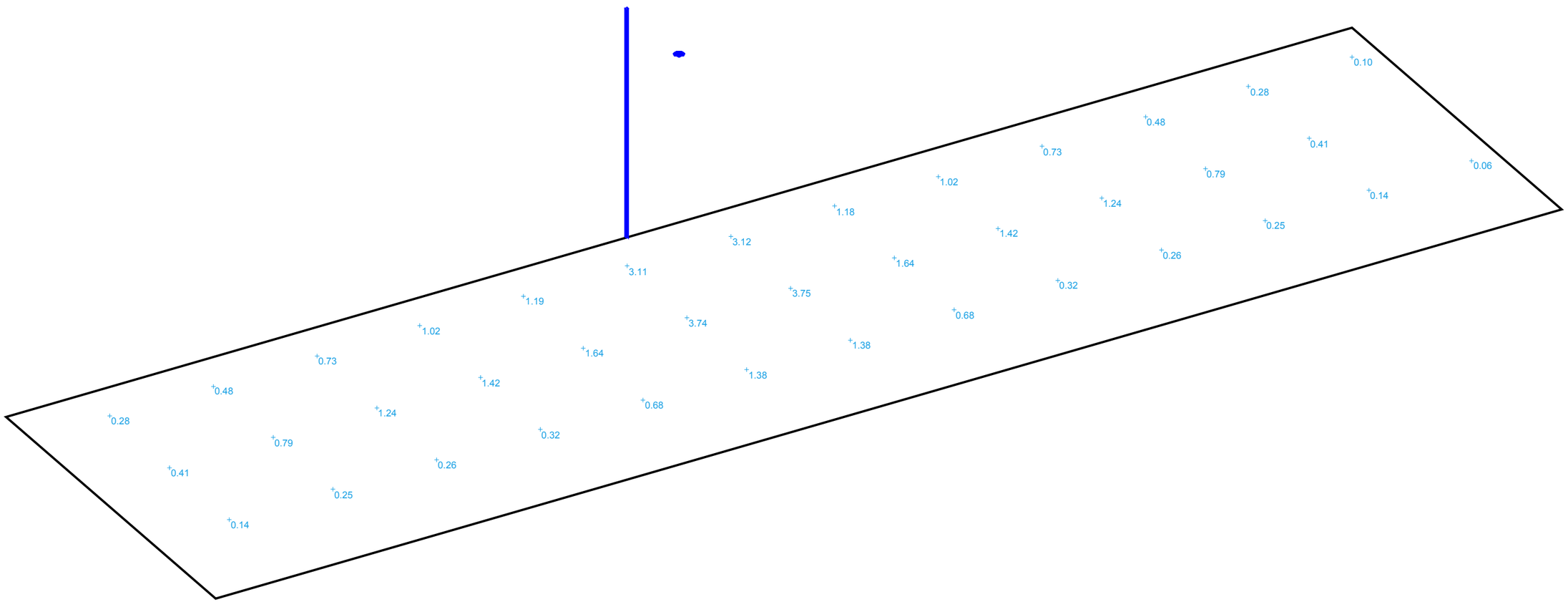

Statistics

Description	Symbol	Avg	Max	Min	Max / Min	Avg / Min
Typical 100 watt HPS Street Lights replaced with 40 watt LED Street Lights	+	1.01 fc	3.75 fc	0.06 fc	62.5:1	16.8:1

Village of Cazenovia
Proposed Exterior Lighting
Typical 100 watt HPS Street Lights replaced with 40 watt LED Street Lights

Designer
SmartWatt
Date
6/23/2017
Scale
Not to Scale
Drawing No.

Typical 250 watt HPS Street Lights replaced with 76 watt LED Street Lights

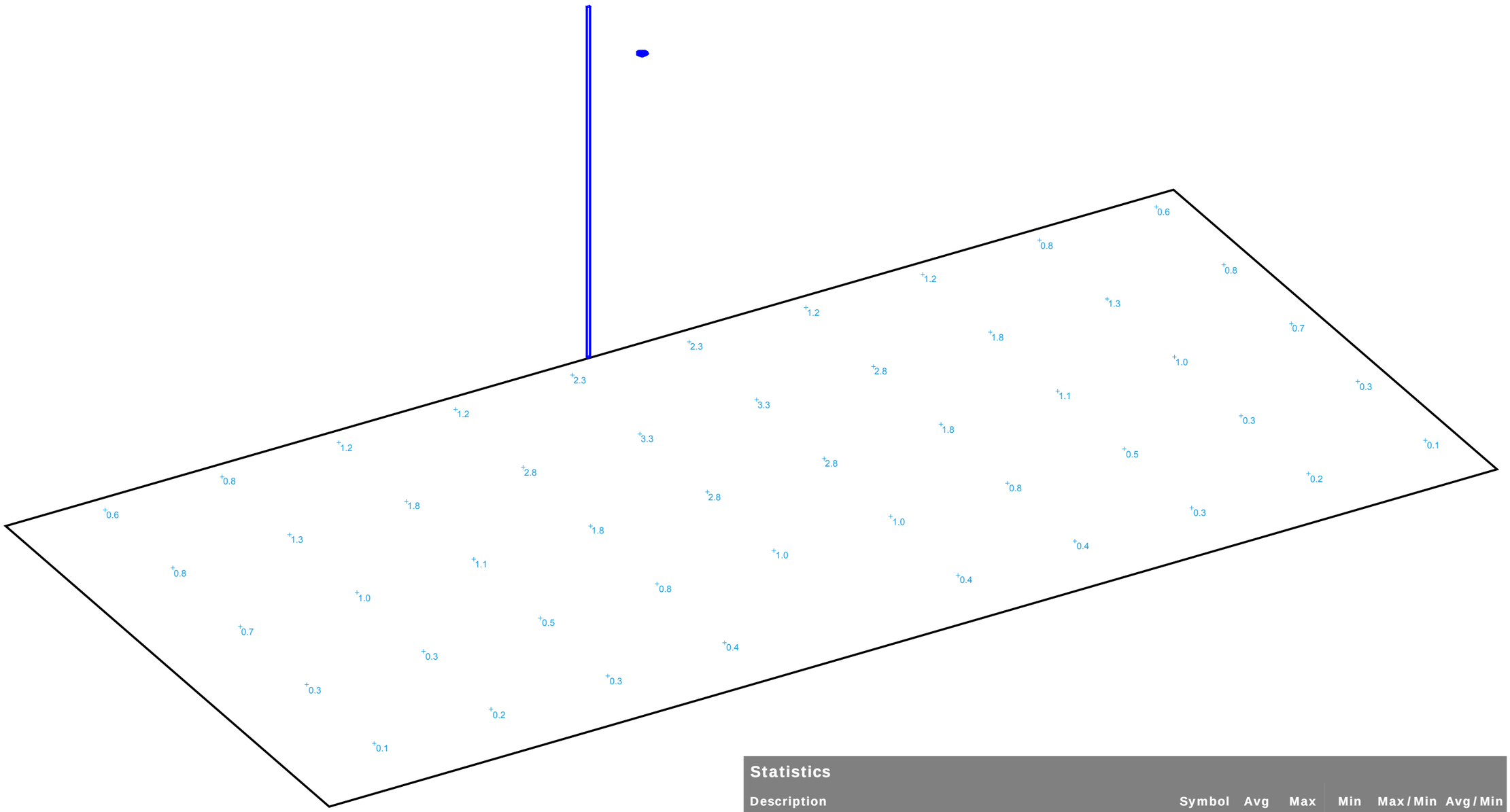

Statistics

Description	Symbol	Avg	Max	Min	Max / Min	Avg / Min
Typical 250 watt HPS Street Lights replaced with 76 watt LED Street Lights	+	1.1 fc	3.3 fc	0.1 fc	33.0:1	11.0:1

Village of Cazenovia
Proposed Exterior Lighting
Typical 250 watt HPS Street Lights replaced with 76 watt LED Street Lights

Designer
SmartWatt
Date
6/23/2017
Scale
Not to Scale
Drawing No.